MedicNEET

NEET 2023 Phase 1 — Previous Year Question Paper

192 in-syllabus PYQs from NEET 2023 Phase 1, reproduced by MedicNEET for practice.

Solve this paper in the real timed exam environment and get a brutal weak-area analysis — scan or open: https://www.medicneet.com/open?paper=neet-2023-phase-1&src=pyq_pdf

Physics · 50 Qs

1. An electric dipole is placed at an angle of 30° with an electric field of intensity 2×10^5 N/C. It experiences a torque equal to 4 N·m. The charge on the dipole, if the dipole length is 2 cm, is

(1) 8 mC
(2) 2 mC
(3) 5 mC
(4) 7 μC

2. If $\oint_S E \cdot dS = 0$ over a closed surface, then:

(1) the number of flux lines entering the surface must be equal to the number of flux lines leaving it.
(2) the magnitude of electric field on the surface is constant.
(3) all the charges must necessarily be inside the surface.
(4) the electric field inside the surface is necessarily uniform.

3. An electric dipole is placed at an angle of 30° with an electric field of intensity 2×10^5 N C^{-1}. It experiences a torque equal to 4 N m. Calculate the magnitude of charge on the dipole, if the dipole length is 2 cm.

(1) 8 mC
(2) 6 mC
(3) 4 mC
(4) 2 mC

4. A metal wire has mass (0.4 ± 0.002) g, radius (0.3 ± 0.001) mm and length (5 ± 0.02) cm. The maximum possible percentage error in the measurement of density will nearly be:

(1) 1.2%
(2) 1.3%
(3) 1.6%
(4) 1.4%

5. The errors in the measurement which arise due to unpredictable fluctuations in temperature and voltage supply are:

(1) Instrumental errors
(2) Personal errors
(3) Least count errors
(4) Random errors

6. An electric dipole is placed as shown in the figure. The electric potential (in 10^2 V) at point P due to the dipole is (ε_0 = permittivity of free space and $K = 1/(4\pi\varepsilon_0)$):

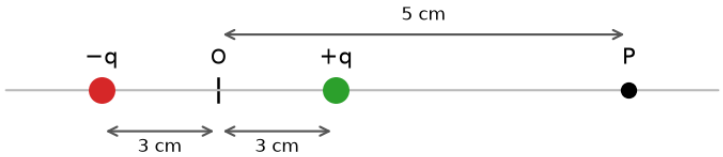

(1) (3/8) qK

(2) (5/8) qK

(3) (8/5) qK

(4) (8/3) qK

7. The equivalent capacitance of the system shown in the following circuit is:

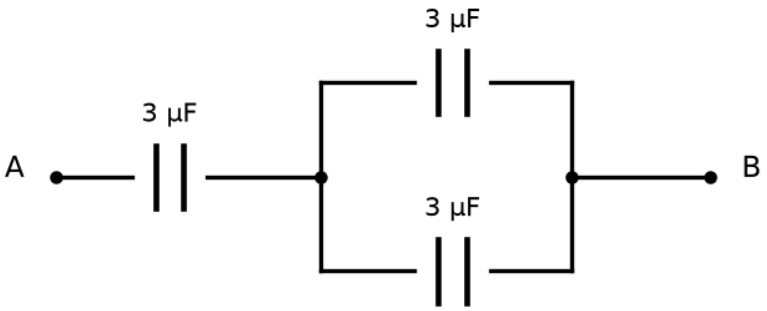

(1) 2 μF

(2) 3 μF

(3) 6 μF

(4) 9 μF

8. A ball is thrown vertically upward with a velocity of 4 m/s from a bridge. The ball strikes the water surface after 4 s. The height of the bridge above the water surface is (g = 10 m/s^2):

(1) 68 m

(2) 60 m

(3) 64 m

(4) 72 m

9. A vehicle travels half the distance with speed v and the remaining half distance with speed 2v. Its average speed is:

(1) $\frac{3v}{4}$

(2) $\frac{4v}{3}$

(3) $\frac{2v}{3}$

(4) $\frac{v}{3}$

10. A bullet enters a wooden block with speed u and, after travelling 24 cm inside it, its speed reduces to u/3. Assuming uniform retardation, the further distance it travels before coming to rest is:

(1) 3 cm

(2) 8 cm

(3) 12 cm

(4) 24 cm

11. A football player is moving southward and suddenly turns eastward with the same speed to avoid an opponent. The force that acts on the player while turning is directed:

(1) Along eastward
(2) Along northward
(3) Along north-east
(4) Along south-west

12. A bullet is fired from a gun at a speed of 280 m/s in a direction 30° above the horizontal. The maximum height attained by the bullet is ($g = 9.8\ \mathrm{m/s^2}$, $\sin 30^\circ = 0.5$):

(1) 2800 m
(2) 2000 m
(3) 1000 m
(4) 3000 m

13. Calculate the maximum acceleration of a moving car so that a body lying on the floor of the car remains stationary. The coefficient of static friction between the body and the floor is 0.15 (g = 10 m/s²):

(1) 1.2 m/s²
(2) 150 m/s²
(3) 1.5 m/s²
(4) 50 m/s²

14. A football player moving southward suddenly turns eastward with the same speed to avoid an opponent. The force that acts on the player while turning is directed:

(1) Eastward
(2) Northward
(3) North-East
(4) South-West

15. A wire carrying a current I along the positive x-axis has length L. It is kept in a magnetic field B = (2î + 3ĵ – 4k̂) T. The magnitude of the magnetic force acting on the wire is:

(1) 3IL
(2) 5√(IL)
(3) 5IL
(4) √3 IL

16. A very long conducting wire is bent in a semi-circular shape from A to B as shown in figure. The magnetic field at point P for steady current configuration is given by:

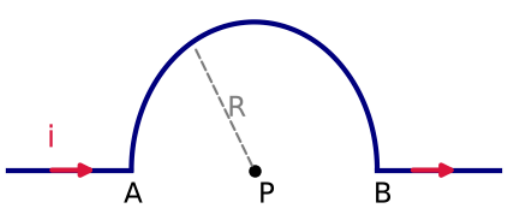

(1) $\mu_0 i/4R$ pointed into the page
(2) $\mu_0 i/4R$ pointed away from the page
(3) $(\mu_0 i/4R)(1 + 2/\pi)$ pointed away from the page
(4) $(\mu_0 i/4R)(1 + 2/\pi)$ pointed into the page

17. The net magnetic flux through any closed surface is:

(1) zero
(2) positive
(3) infinity
(4) negative

18. The magnetic energy stored in an inductor of inductance 4 μH carrying a current of 2 A is:

(1) 4 J
(2) 4 mJ
(3) 8 mJ
(4) 8 μJ

19. The ratio of the radius of gyration of a solid sphere (about its own axis) to that of a thin hollow sphere of the same mass and radius (about its axis) is:

(1) 3 : 5
(2) 5 : 3
(3) $\sqrt{3} : \sqrt{5}$
(4) $\sqrt{5} : \sqrt{3}$

20. The angular acceleration of a body moving along the circumference of a circle is directed:

(1) along the radius, away from the centre
(2) along the radius, towards the centre
(3) along the tangent to its position
(4) along the axis of rotation

21. A 12 V, 60 W lamp is connected to secondary of step down transformer, whose primary is connected to ac mains of 220 V. Assuming the transformer to be ideal, what is the current in the primary winding?

(1) 0.27 A
(2) 2.7 A
(3) 3.7 A
(4) 0.37 A

22. The net impedance of circuit (as shown in figure) will be (series circuit with R = 10 Ω, an inductor and a capacitor driven by an AC source; from the figure values X_L = 5 Ω and X_C = 10 Ω).

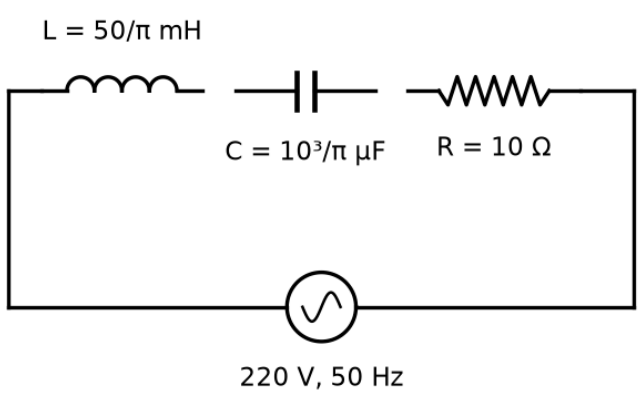

(1) $10\sqrt{2}$ Ω
(2) 15 Ω
(3) $5\sqrt{5}$ Ω
(4) $15\sqrt{2}$ Ω

23. In a series LCR circuit, the inductance L is 10 mH, capacitance C is 1 μF and resistance R is 100 Ω. The frequency at which resonance occurs is:

(1) 15.9 rad/s
(2) 15.9 kHz
(3) 1.59 rad/s
(4) 1.59 kHz

24. An ac source is connected to a capacitor C. Due to decrease in its operating frequency:

(1) Capacitive reactance decreases
(2) Displacement current increases
(3) Displacement current decreases
(4) Capacitive reactance remains constant

---

25. Two bodies of mass m and 9m are placed a distance R apart. The gravitational potential at the point on the line joining them where the gravitational field is zero is (G = gravitational constant):

(1) –8Gm/R
(2) –12Gm/R
(3) –16Gm/R
(4) –20Gm/R

---

26. A satellite orbits just above the earth's surface with period T. If d is the mean density of the earth and G the gravitational constant, the quantity $3\pi/(Gd)$ represents:

(1) T
(2) T^2
(3) T^3
(4) $\sqrt{T}$

---

27. In a plane electromagnetic wave travelling in free space, the electric field component oscillates sinusoidally at a frequency of 2.0×10^{10} Hz and amplitude 48 V/m. Then the amplitude of the oscillating magnetic field is (speed of light in free space = 3×10^8 m/s)

(1) 1.6×10^{-9} T
(2) 1.6×10^{-8} T
(3) 1.6×10^{-7} T
(4) 1.6×10^{-6} T

---

28. An ac source is connected to a capacitor C. Due to a decrease in its operating frequency,

(1) Capacitive reactance decreases
(2) Displacement current increases
(3) Displacement current decreases
(4) Capacitive reactance remains constant

---

29. 10 resistors (R each) in series with a battery (emf E, negligible internal resistance); then connected in parallel — the current increases n times. The value of n is:

(1) 10
(2) 100
(3) 1
(4) 1000

---

30. The magnitude and direction of the current in the following circuit is:

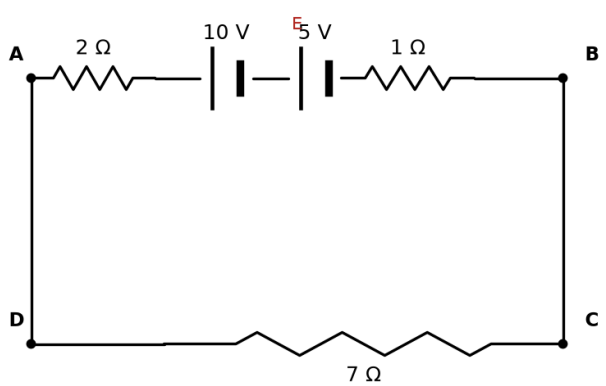

(1) 0.2 A from B to A through E
(2) 0.5 A from A to B through E
(3) 5/9 A from A to B through E
(4) 1.5 A from B to A through E

31. A copper wire of radius 1 mm contains 10^{22} free electrons per m^3. The drift velocity for a 10 A current is (e = 1.6×10^{-19} C):

(1) $6.25/\pi$ m s^{-1}

(2) $(6.25\times10^3)/\pi$ m s^{-1}

(3) $(6.25\times10^4)/\pi$ m s^{-1}

(4) $(6.25/\pi)\times10^2$ m s^{-1}

32. If the galvanometer G does not show any deflection in the circuit shown, the value of R is given by:

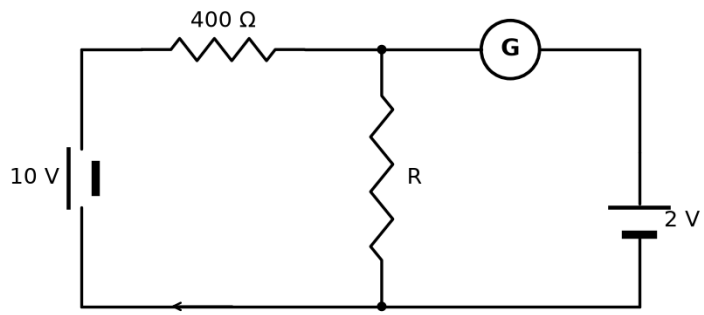

(1) 200 Ω

(2) 50 Ω

(3) 100 Ω

(4) 400 Ω

33. Wire A has resistance 81 Ω. Wire B (same material, equal length, diameter three times that of A) has resistance:

(1) 729 Ω

(2) 243 Ω

(3) 81 Ω

(4) 9 Ω

34. The emf of a cell (internal resistance 1 Ω) balances at 330 cm on a potentiometer. With a 2 Ω external resistance across the cell, the balance length is:

(1) 115 cm

(2) 332 cm

(3) 220 cm

(4) 330 cm

35. Resistance of a carbon resistor from colour codes is (22000 ± 5%) Ω. The colour of the third band must be:

(1) Red

(2) Green

(3) Orange

(4) Yellow

36. The resistance of a platinum wire is 2 Ω at 0°C and 6.8 Ω at 80°C. The temperature coefficient of resistance is:

(1) 3×10^{-4} °C^{-1}

(2) 3×10^{-3} °C^{-1}

(3) 3×10^{-2} °C^{-1}

(4) 3×10^{-1} °C^{-1}

37. The venturi-meter works on:

(1) Huygens's principle

(2) Bernoulli's principle

(3) the principle of parallel axes

(4) the principle of perpendicular axes

38. The amount of energy required to form a soap bubble of radius 2 cm from a soap solution is nearly: (surface tension of soap solution = 0.03 N m^{-1})

(1) 30.16×10^{-4} J

(2) 5.06×10^{-4} J

(3) 3.01×10^{-4} J

(4) 50.1×10^{-4} J

39. Two thin lenses are of the same focal length (f), but one is convex and the other one is concave. When they are placed in contact with each other, the equivalent focal length of the combination will be:

(1) Zero

(2) f/4

(3) f/2

(4) Infinite

40. In the figure shown, what is the equivalent focal length of the combination of lenses (assume that all layers are thin)? The two outer lenses are glass (μ = 1.5) with curved-face radius 20 cm; the middle layer (μ = 1.6) is bounded by two plane faces.

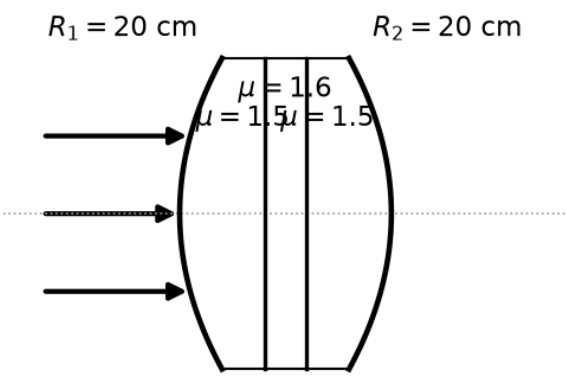

(1) 40 cm

(2) –40 cm

(3) –100 cm

(4) –50 cm

41. Light travels a distance x in time t_1 in air and 10x in time t_2 in another denser medium. What is the critical angle for this medium?

(1) $\sin^{-1}(t_1/t_2)$

(2) $\sin^{-1}(10\ t_2/t_1)$

(3) $\sin^{-1}(t_1/10\ t_2)$

(4) $\sin^{-1}(10\ t_1/t_2)$

42. For Young's double slit experiment, two statements are given below:

Statement I: If the screen is moved away from the plane of the slits, the angular separation of the fringes remains constant.

Statement II: If the monochromatic source is replaced by another monochromatic source of larger wavelength, the angular separation of fringes decreases.

In the light of the above statements, choose the correct answer from the options given below:

(1) Both Statement I and Statement II are true

(2) Both Statement I and Statement II are false

(3) Statement I is true but Statement II is false

(4) Statement I is false but Statement II is true

43. The minimum wavelength of X-rays produced by an electron accelerated through a potential difference of V volts is proportional to:

(1) V
(2) 1/V
(3) 1/√V
(4) √V

44. The work functions of Caesium (Cs), Potassium (K) and Sodium (Na) are 2.14 eV, 2.30 eV and 2.75 eV respectively. If incident electromagnetic radiation has an energy of 2.20 eV, which of these photosensitive surfaces may emit photoelectrons?

(1) Cs only
(2) Both Na and K
(3) K only
(4) Na only

45. A Carnot engine has an efficiency of 50% when its source is at $327\,^{\circ}$C. The temperature of the sink is

(1) $27\,^{\circ}$C
(2) $15\,^{\circ}$C
(3) $100\,^{\circ}$C
(4) $200\,^{\circ}$C

46. Reversible expansion of an ideal gas under isothermal and adiabatic conditions is shown in the figure, where AB is the isothermal expansion and AC is the adiabatic expansion, both starting from the common state A. Which of the following options is NOT correct?

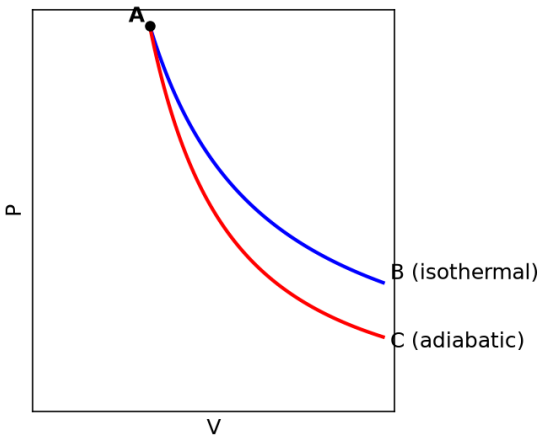

(1) $S_{\text{isothermal}} > S_{\text{adiabatic}}$
(2) $T_A = T_B$
(3) $W_{\text{isothermal}} > W_{\text{adiabatic}}$
(4) $T_C > T_A$

47. The radius of innermost orbit of hydrogen atom is 5.3×10^{-11} m. What is the radius of the third allowed orbit of hydrogen atom?

(1) 0.53 Å
(2) 1.06 Å
(3) 1.59 Å
(4) 4.77 Å

48. In hydrogen spectrum, the shortest wavelength in the Balmer series is λ. The shortest wavelength in the Brackett series is:

(1) 2λ
(2) 4λ
(3) 9λ
(4) 16λ

49. The temperature of a gas is –50 °C. To what temperature should the gas be heated so that the rms speed is increased by 3 times?

(1) 669 °C
(2) 3295 °C
(3) 3097 K
(4) 223 K

50. The half-life of a radioactive substance is 20 minutes. In how much time does the activity of the substance drop to 1/16 of its initial value? (Out of syllabus)

(1) 20 minutes
(2) 40 minutes
(3) 60 minutes
(4) 80 minutes

Chemistry · 42 Qs

51. Given below are two statements: one is labelled as Assertion (A) and the other is labelled as Reason (R).
Assertion (A): Helium is used to dilute oxygen in diving apparatus.
Reason (R): Helium has high solubility in O_2.
In the light of the above statements, choose the correct answer from the options given below.

(1) Both A and R are true and R is the correct explanation of A
(2) Both A and R are true and R is NOT the correct explanation of A
(3) A is true but R is false
(4) A is false but R is true

52. The weight (g) of two moles of the organic compound obtained by heating sodium ethanoate with sodium hydroxide in the presence of calcium oxide is

(1) 16
(2) 32
(3) 30
(4) 18

53. The mass of CO_2 produced by heating 20 g of 20\% pure limestone is (at. mass Ca = 40)

$$CaCO_3 \xrightarrow{1200\,K} CaO + CO_2$$

(1) 1.76 g
(2) 2.64 g
(3) 1.32 g
(4) 1.12 g

54. The conductivity of centimolar solution of KCl at $25\,^\circ C$ is $0.0210\ ohm^{-1}cm^{-1}$ and the resistance of the cell containing the solution at $25\,^\circ C$ is $60\ ohm$. The value of cell constant is

(1) $1.34\ cm^{-1}$
(2) $3.28\ cm^{-1}$
(3) $1.26\ cm^{-1}$
(4) $3.34\ cm^{-1}$

55. The relation between n_m (n_m = the number of permissible values of the magnetic quantum number m) for a given value of the azimuthal quantum number l is:

(1) $n_m = 2l + 1$
(2) $l = 2n_m + 1$
(3) $l = \frac{n_m - 1}{2}$
(4) $l = n_m + 2$

56. [NEET 2016 Phase 2 · NEET 2017 · NEET 2023 Phase 1] Which one of the following statements is \textbf{not} correct?

(1) Catalyst does not initiate any reaction

(2) The value of equilibrium constant is changed in the presence of a catalyst in the reaction at equilibrium

(3) Enzymes catalyse mainly bio-chemical reactions

(4) Coenzymes increase the catalytic activity of enzyme

---

57. Given below are two statements: one is labelled as Assertion A and the other is labelled as Reason R.

\textbf{Assertion A:} A reaction can have zero activation energy.

\textbf{Reason R:} The minimum extra amount of energy absorbed by reactant molecules so that their energy becomes equal to the threshold value is called activation energy.

In the light of the above statements, choose the correct answer from the options given below:

(1) Both A and R are true and R is the correct explanation of A

(2) Both A and R are true and R is not the correct explanation of A

(3) A is true but R is false

(4) A is false but R is true

---

58. For a certain reaction, the rate $= k[A]^2[B]$. When the initial concentration of A is tripled keeping the concentration of B constant, the initial rate would

(1) Decrease by a factor of nine

(2) Increase by a factor of six

(3) Increase by a factor of nine

(4) Increase by a factor of three

---

59. The element expected to form the largest ion to achieve the nearest noble gas configuration is:

(1) O

(2) F

(3) N

(4) Na

---

60. Amongst the following, the total number of species NOT having eight electrons around the central atom in its outermost shell is:
$\mathrm{NH_3}$, $\mathrm{AlCl_3}$, $\mathrm{BeCl_2}$, $\mathrm{CCl_4}$, $\mathrm{PCl_5}$

(1) 3

(2) 2

(3) 4

(4) 1

---

61. The number of σ bonds, π bonds and lone pairs of electrons in pyridine ($\mathrm{C_5H_5N}$), respectively, are:

(1) $11, 2, 0$

(2) $12, 3, 0$

(3) $11, 3, 1$

(4) $12, 2, 1$

---

62. The correct order of energies of the molecular orbitals of the $\mathrm{N_2}$ molecule is:

(1) $\sigma 1s < \sigma^* 1s < \sigma 2s < \sigma^* 2s < (\pi 2p_x = \pi 2p_y) < \sigma 2p_z < (\pi^* 2p_x = \pi^* 2p_y) < \sigma^* 2p_z$

(2) $\sigma 1s < \sigma^* 1s < \sigma 2s < \sigma^* 2s < \sigma 2p_z < (\pi 2p_x = \pi 2p_y) < (\pi^* 2p_x = \pi^* 2p_y) < \sigma^* 2p_z$

(3) $\sigma 1s < \sigma^* 1s < \sigma 2s < \sigma^* 2s < \sigma 2p_z < \sigma^* 2p_z < (\pi 2p_x = \pi 2p_y) < (\pi^* 2p_x = \pi^* 2p_y)$

(4) $\sigma 1s < \sigma^* 1s < \sigma 2s < \sigma^* 2s < (\pi 2p_x = \pi 2p_y) < (\pi^* 2p_x = \pi^* 2p_y) < \sigma 2p_z < \sigma^* 2p_z$

---

63. The stability of $\mathrm{Cu^{2+}}$ salts is more than $\mathrm{Cu^{+}}$ salts in aqueous solution due to

(1) First ionisation enthalpy

(2) Enthalpy of atomization

(3) Hydration energy

(4) Second ionisation enthalpy

64. Which of the following statements are INCORRECT?

A. All the transition metals except scandium form MO oxides which are ionic.
B. The highest oxidation number corresponding to the group number in transition metal oxides is attained in Sc_2O_3 to Mn_2O_7.
C. Basic character increases from V_2O_3 to V_2O_4 to V_2O_5.
D. V_2O_4 dissolves in acids to give ${VO_4}^{3-}$ salts.
E. CrO is basic but Cr_2O_3 is amphoteric.

Choose the correct answer from the options given below:

(1) A and E only
(2) B and D only
(3) C and D only
(4) B and C only

65. The homoleptic complex from the following complexes is:

(1) Potassium trioxalatoaluminate(III)
(2) Diamminechloridonitrito-N-platinum(II)
(3) Pentaamminecarbonatocobalt(III) chloride
(4) Triamminetriaquachromium(III) chloride

66. Which complex compound is the most stable?

(1) $[Co(NH_3)_4(H_2O)Br](NO_3)_2$
(2) $[Co(NH_3)_3(NO_3)_3]$
(3) $[CoCl_2(en)_2]NO_3$
(4) $[Co(NH_3)_5](SO_4)_3$

67. Which of the following forms a set of a complex and a double salt, respectively?

(1) $K_2PtCl_2 \cdot 2\,NH_3$ and $KAl(SO_4)_2 \cdot 12\,H_2O$
(2) $NiCl_2 \cdot 6\,H_2O$ and $NiCl_2(H_2O)_4$
(3) $CuSO_4 \cdot 5\,H_2O$ and $CuCl_2 \cdot 4\,NH_3$
(4) $PtCl_2 \cdot 2\,NH_3$ and $PtCl_4 \cdot 2\,HCl$

68. Type of isomerism exhibited by the compounds $[Cr(H_2O)_6]Cl_3$, $[Cr(H_2O)_5Cl]Cl_2 \cdot H_2O$ and $[Cr(H_2O)_4Cl_2]Cl \cdot 2\,H_2O$, and the value of the coordination number (CN) of the central metal ion in all these compounds, respectively, is:

(1) Ionisation isomerism, CN = 4
(2) Solvate isomerism, CN = 6
(3) Geometrical isomerism, CN = 4
(4) Optical isomerism, CN = 4

69. Identify the final product [D] in the following sequence:
\ce{CH3CHO ->[(i) LiAlH4][(ii) H3O+] [A] ->[H2SO4,\ \Delta] [B] ->[HBr] [C] ->[C6H5Br,\ Na/\text{dry ether}] [D]}

(1) Ethylbenzene $(C_6H_5-CH_2CH_3)$
(2) Biphenyl $(C_6H_5-C_6H_5)$
(3) C_4H_{10}
(4) Sodium acetylide $(HC{\equiv}C^-\ Na^+)$

70. The compound shown — $C_6H_5-CH=CH-CH(Br)-CH_2-CH_3$ (a benzene ring with a $-CH=CH-$ unit, then an sp^3 carbon bearing Br adjacent to the $C=C$) — is an example of a:

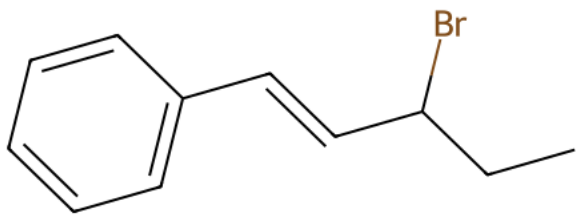

(1) Benzylic halide

(2) Aryl halide

(3) Allylic halide

(4) Vinylic halide

---

71. Identify the final product in the following sequence:
\ce{C6H5N2^+ Cl^- ->[CuBr/HBr] (i) ->[Mg/\text{dry ether}] (ii) ->[H2O] Product}

(1) Phenol (C_6H_5OH)

(2) Benzene (C_6H_6)

(3) Phenylmagnesium bromide (C_6H_5MgBr)

(4) p-Bromophenol

---

72. Identify the product (P) in the following reaction:
$(CH_3)_2CH-CH(OH)-CH_3 + HBr \longrightarrow P$
(the alcohol is 3-methylbutan-2-ol)

(1) $CH_3-CBr(CH_3)-CH_2-CH_3$ (2-bromo-2-methylbutane)

(2) $CH_3-CH=CH-CH_3$ (but-2-ene)

(3) $(CH_3)_2CH-CHBr-CH_3$ (2-bromo-3-methylbutane)

(4) $(CH_3)_3C-CH_2Br$ (1-bromo-2,2-dimethylpropane)

---

73. An ideal gas expands isothermally from $10^{-3}\ m^3$ to $10^{-2}\ m^3$ at $300\ K$ against a constant pressure of $10^5\ N\,m^{-2}$. The work done on the gas is:

(1) $+270\ kJ$

(2) $-900\ J$

(3) $+900\ kJ$

(4) $-900\ kJ$

74. Reversible expansion of an ideal gas under isothermal and adiabatic conditions is shown in the figure ($\mathrm{A} \longrightarrow \mathrm{B}$ isothermal expansion, $\mathrm{A} \longrightarrow \mathrm{C}$ adiabatic expansion on a p–V plot). Which of the following options is NOT correct?

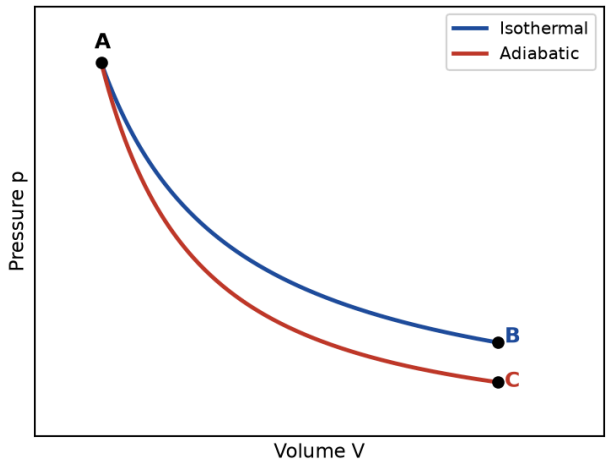

(1) $\Delta S_{isothermal} > \Delta S_{adiabatic}$

(2) $T_A = T_B$

(3) $W_{isothermal} > W_{adiabatic}$

(4) $T_C > T_A$

75. Which amongst the following options is the correct relation between change in enthalpy and change in internal energy?

(1) $\Delta H = \Delta U - \Delta n_g RT$

(2) $\Delta H = \Delta U + \Delta n_g RT$

(3) $\Delta H - \Delta U = -\Delta n_g RT$

(4) $\Delta H + \Delta U = \Delta n_g R$

76. The equilibrium concentrations of the species in the reaction $\mathrm{A} + \mathrm{B} \rightleftharpoons \mathrm{C} + \mathrm{D}$ are 2, 3, 10 and 6 $\mathrm{mol\,L^{-1}}$, respectively, at 300 K. ΔG° for the reaction is (Given $R = 2\ \mathrm{cal\,mol^{-1}K^{-1}}$).

(1) $1372.60\ \mathrm{cal}$

(2) $-137.26\ \mathrm{cal}$

(3) $-1381.80\ \mathrm{cal}$

(4) $-13.73\ \mathrm{cal}$

77. Consider the following reaction: $2\,\mathrm{H_2}\,(\mathrm{g}) + \mathrm{O_2}\,(\mathrm{g}) \longrightarrow 2\,\mathrm{H_2O}\,(\mathrm{g})$, $\Delta_r H^\circ = -483.64\ \mathrm{kJ}$. What is the enthalpy change for the decomposition of one mole of water?

(1) $18\ \mathrm{kJ}$

(2) $100\ \mathrm{kJ}$

(3) $120.9\ \mathrm{kJ}$

(4) $241.82\ \mathrm{kJ}$

78. Consider the following reaction and identify the major product (P):

$\mathrm{CH_3{-}CH(CH_3){-}CH(OH){-}CH_3} \xrightarrow{\mathrm{HBr}} \mathrm{P}$

(3-methylbutan-2-ol)

(1) $\mathrm{CH_3{-}C(Br)(CH_3){-}CH_2{-}CH_3}$ (2-bromo-2-methylbutane)

(2) $\mathrm{CH_3{-}CH{=}CH{-}CH_3}$ (2-methylbut-2-ene)

(3) $\mathrm{CH_3{-}CH(CH_3){-}CH(Br){-}CH_3}$ (2-bromo-3-methylbutane)

(4) $\mathrm{(CH_3)_3C{-}CH_2Br}$ (1-bromo-2,2-dimethylpropane)

79. Which amongst the following would be most readily dehydrated under acidic conditions?

(A)

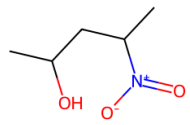

(B)

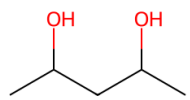

(C)

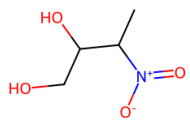

(D)

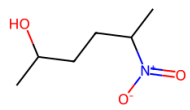

(1) (A) **(2)** (B)

(3) (C) **(4)** (D)

---

80. Consider the following reaction and identify the products A and B:

$$C_6H_5-CH_2-O-C_6H_5 \xrightarrow[\Delta]{HI} A + B$$

(benzyl phenyl ether)

(1) A = $C_6H_5-CH_3$ (toluene) and B = C_6H_5-OH (phenol)

(2) A = $C_6H_5-CH_2OH$ (benzyl alcohol) and B = C_6H_5-I (iodobenzene)

(3) A = $C_6H_5-CH_2I$ (benzyl iodide) and B = C_6H_5-OH (phenol)

(4) A = $C_6H_5-CH_3$ (toluene) and B = C_6H_5-I (iodobenzene)

---

81. Identify the final product [D] in the following sequence: \ce{CH3CHO ->[{(i) LiAlH4}][{(ii) H3O+}] [A] ->[{H2SO4}][\Delta] [B] ->[HBr] [C] ->[{C6H5Br, Na}][{dry ether}] [D]}

(1) Ethylbenzene $C_6H_5-CH_2CH_3$

(2) Biphenyl $C_6H_5-C_6H_5$

(3) C_4H_{10}

(4) Sodium acetylide $HC{\equiv}C^-\ Na^+$

---

82. Complete the following reaction. Cyclohexanone $[A]$ reacts with HCN to give $[B]$, which on treatment with conc. H_2SO_4/heat gives $[C]$. C is:

(1) cyclohexanol (ring with $-OH$)

(2) cyclohexane carbaldehyde (ring with $-CHO$)

(3) 1-hydroxycyclohexane-1-carbonitrile (ring with $-OH$ and $-CN$)

(4) cyclohexane carboxylic acid (ring with $-COOH$)

---

83. Identify the product (A) in the following reaction. The substrate is 1-(4-acetylphenyl)ethan-1-one type compound bearing two $-COCH_3$ (acetyl) groups, treated with $Zn-Hg$ / conc. HCl:

$$\text{substrate} \xrightarrow[\text{conc}\cdot HCl]{Zn-Hg} A + 2\,H_2O$$

(1) Both $-COCH_3$ groups reduced to $-CH_2CH_3$ (ethyl)

(2) Both groups reduced to $-CH(OH)CH_3$ (secondary alcohols)

(3) One $-CH(OH)^-$ and one $-CH_2OH$ group

(4) Both groups replaced by $-CH_3$ (methyl)

84. Identify the major product obtained when 2-acetylbenzaldehyde (an ortho-disubstituted benzene bearing $-CO-CH_3$ and $-CHO$) is treated with $2\,[Ag(NH_3)_2]^+$ and $3\,OH^-$ on heating.

(1) Benzene ring bearing $-CH(OH)CH_3$ and $-CH_2OH$

(2) Benzene ring bearing $-CO-CH_3$ (intact) and $-CH_2OH$

(3) Benzene ring bearing $-CO-CH_3$ (intact) and $-COO-$ (2-acetylbenzoate)

(4) Benzene ring bearing $-CH(OH)CH_3$ and $-COO-$

---

85. On balancing the given redox reaction, the coefficients a, b and c are found to be, respectively:
\ce{a$Cr2O7^2-(aq)$+b$SO3^2-(aq)$+c$H^+(aq)$->$2Cr^3+(aq)$+b$SO4^2-(aq)$+c/2 H2O(l)}

(1) $1, 3, 8$

(2) $3, 8, 1$

(3) $1, 8, 3$

(4) $8, 1, 3$

---

86. Which of the following reactions will NOT give a primary amine as the product?

(1) $CH_3CONH_2 \xrightarrow{Br_2/KOH} \text{Product}$

(2) $CH_3CN \xrightarrow[\text{(ii) } H_3O^+]{\text{(i) } LiAlH_4} \text{Product}$

(3) $CH_3NC \xrightarrow[\text{(ii) } H_3O^+]{\text{(i) } LiAlH_4} \text{Product}$

(4) $CH_3CONH_2 \xrightarrow[\text{(ii) } H_3O^+]{\text{(i) } LiAlH_4} \text{Product}$

---

87. Identify the final product in the following reaction sequence: $C_6H_5N_2{}^+Cl^- \xrightarrow[\text{(ii) } Mg/\text{dry ether}]{\text{(i) } Cu_2Br_2/HBr} [\text{(iii) } H_2O]\ \text{Product}$

(1) Phenol, C_6H_5OH

(2) Benzene, C_6H_6

(3) Phenylmagnesium bromide, C_6H_5MgBr

(4) 4-Bromophenol, $HO-C_6H_4-Br$

---

88. [NEET 2016 Phase 2 · NEET 2017 · NEET 2023 Phase 1] Which one of the following statements is not correct?

(1) Catalyst does not initiate any reaction

(2) The value of equilibrium constant is changed in the presence of a catalyst in the reaction at equilibrium

(3) Enzymes catalyse mainly bio-chemical reactions

(4) Coenzymes increase the catalytic activity of enzyme

---

89. Given below are two statements:
Statement I: A unit formed by the attachment of a base to the 1' position of sugar is known as a nucleoside.
Statement II: When a nucleoside is linked to phosphorous acid at the 5'-position of the sugar moiety, we get a nucleotide.
In the light of the above statements, choose the correct answer from the options given below:

(1) Both Statement I and Statement II are true

(2) Both Statement I and Statement II are false

(3) Statement I is true but Statement II is false

(4) Statement I is false but Statement II is true

---

90. In Lassaigne's extract of an organic compound, both nitrogen and sulphur are present, which gives a blood-red colour with Fe^{3+} due to the formation of:

(1) $Fe_4[Fe(CN)_6]_3 \cdot x\,H_2O$

(2) $NaSCN$

(3) $[Fe(CN)_5NOS]^{4-}$

(4) $[Fe(SCN)]^{2+}$

91. Which amongst the following compounds would be most readily dehydrated under acidic conditions?

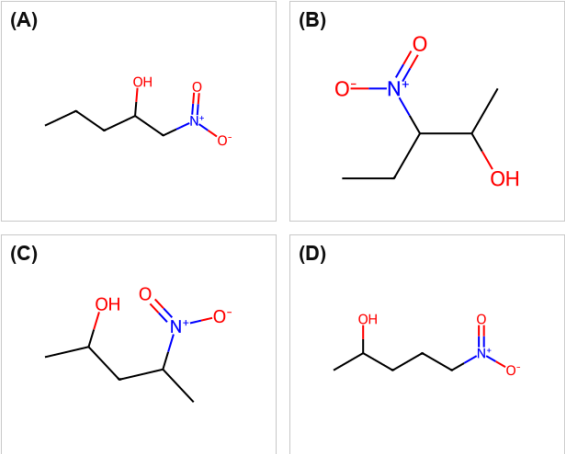

(1) (A) **(2)** (B)

(3) (C) **(4)** (D)

92. Consider the following compounds/species: (i) naphthalene; (ii) cyclopentadienyl anion; (iii) cyclobutadiene; (iv) cyclopropenyl anion; (v) cyclopropenyl cation; (vi) cyclooctatetraene; (vii) anthracene. The number of compounds/species which obey Hückel's rule is _____.

(1) 4 **(2)** 6

(3) 2 **(4)** 5

Biology · 100 Qs

93. What is the function of tassels in the corn cob?

(1) To attract insects **(2)** To trap pollen grains

(3) To disperse pollen grains **(4)** To protect seeds

94. [NEET 2022 · NEET 2023 Phase 1 · NEET 2023 Phase 2 · NEET 2024 · NEET 2025] Given below are two statements:

Assertion (A): Cells of the tapetum possess dense cytoplasm and generally have more than one nucleus.

Reason (R): Presence of more than one nucleus in the tapetum increases the efficiency of nourishing the developing microspore mother cells.

In the light of the above statements, choose the correct answer:

(1) A is true but R is false **(2)** A is false but R is true

(3) Both A and R are true and R is the correct explanation of A **(4)** Both A and R are true but R is NOT the correct explanation of A

95. Given below are two statements: One is labelled as Assertion A and the other is labelled as Reason R:
Assertion A: A flower is defined as modified shoot wherein the shoot apical meristem changes to floral meristem.
Reason R: Internode of the shoot gets condensed to produce different floral appendages laterally at successive nodes instead of leaves.
In the light of the above statements, choose the correct answer from the options given below:

(1) Both A and R are true and R is the correct explanation of A.
(2) Both A and R are true but R is NOT the correct explanation of A.
(3) A is true but R is not false.
(4) A is not false but R is true.

---

96. Large, colourful, fragrant flowers with nectar are seen in:

(1) insect pollinated plants
(2) bird pollinated plants
(3) bat pollinated plants
(4) wind pollinated plants

---

97. In angiosperm, the haploid, diploid and triploid structures of a fertilized embryo sac sequentially are:

(1) Synergids, Primary endosperm nucleus and zygote
(2) Antipodals, synergids, and primary endosperm nucleus
(3) Synergids, Zygote and Primary endosperm nucleus
(4) Synergids, antipodals and Polar nuclei

---

98. [NEET 2017 · NEET 2018 · NEET 2019 · NEET 2019 Odisha · NEET 2020 · NEET 2021 · NEET 2023 Phase 1] Which of the following statements is correct

(1) Lichens do not grow in polluted areas.
(2) Algal component of lichens is called mycobiont.
(3) Fungal component of lichens is called phycobiont
(4) Lichens are not good pollution indicators.

---

99. Given below are two statements:
Statement I: RNA mutates at a faster rate.
Statement II: Viruses having RNA genome and shorter life span mutate and evolve faster.
In the light of the above statements, choose the correct answer from the options given below:

(1) Both Statements 1 and 2 are true
(2) Both statements 1 and 2 are false
(3) Statement 1 is true, but Statement 2 is false
(4) Statement 1 is false, but Statement 2 is true

---

100. Which of the following statements are correct regarding female reproductive cycle?
A. In non-primate mammals cyclical changes during reproduction are called oestrus cycle.
B. First menstrual cycle begins at puberty and is called menopause.
C. Lack of menstruation may be indicative of pregnancy.
D. Cyclic, menstruation extends between menarche and menopause.
Choose the most appropriate answer from the options given below:

(1) A and D only
(2) A and B only
(3) A, B and C only
(4) A, C and D only

---

101. Given below are two statements:
Statement I: Vas deferens receives a duct from seminal vesicle and opens into urethra as the ejaculatory duct.
Statement II: The cavity of the cervix is called cervical canal which along with vagina forms birth canal.
In the light of the above statements, choose the correct answer from the options given below:

(1) Both Statements I and II are true.
(2) Both statements I and II are false.
(3) Statement I is true but Statement II is false.
(4) Statement I is false, but Statement II is true.

102. Given below are two statements: one is labelled as Assertion A and other is labelled as Reason R.
Assertion A: Endometrium is necessary for implantation of blastocyst.
Reason R: In the absence of fertilization, the corpus luteum degenerates that causes disintegration of endometrium.
In the light of the above statements, choose the correct answer from the options given below:

(1) Both A and R are true and R is the correct explanation of A.

(2) Both A and R are true but R is NOT the correct explanation of A.

(3) A is true but R is false.

(4) A is false but It is true.

---

103. Given below are two statements: One is labelled as Assertion A and the other is labelled as Reason R:
Assertion A: In gymnosperms the pollen grains are released from the microsporangium and carried by air currents.
Reason R: Air currents carry the pollen grains to the mouth of the archegonia where the gametes are discharged and pollen tube is not formed.
In the light of the above statements, choose the correct answer from the options given below:

(1) Both A and R are true and R is the correct explanation of A.

(2) Both A and R are true but R is NOT the correct explanation of A.

(3) A is true but R is NOT true.

(4) A is NOT true but R is true.

---

104. Given below are two statements: One is labelled as Assertion A and the other is labelled as Reason R:
Assertion A: The first stage of gametophyte in the life cycle of moss is protonema stage.
Reason R: Protonema develops directly from spores produced in capsule.
In the light of the above statements, choose the most appropriate answer from the options given below:

(1) Both A and R are correct and R is the correct explanation of A.

(2) Both A and R are correct but R is NOT the correct explanation of A.

(3) A is correct but R is not correct.

(4) A is not correct but R is correct.

---

105. Identify the pair of heterosporous pteridophytes among the following:

(1) Lycopodium and Selaginella

(2) Selaginella and Salvinia

(3) Psilotum and Salvinia

(4) Equisetum and Salvinia

---

106. Match List I with List II:

List I
A. Vasectomy
B. Coitus interruptus
C. Cervical caps
D. Saheli

List II
I. Oral method
II. Barrier method
III. Surgical method
IV. Natural method

Choose the correct answer from the options given below:

(1) A-III, B-I, C-IV, D-II

(2) A-III, B-IV, C-II, D-I

(3) A-II, B-III, C-I, D-IV

(4) A-IV, B-II, C-I, D-III

107. Given below are two statements: One is labelled as Assertion A and the other is labelled as Reason R:

Assertion A: Amniocentesis for sex determination is one of the strategies of Reproductive and Child Health Care programme.
Reason R: Ban on amniocentesis checks increasing menace of female foeticide.

In the light of the above statements, choose the correct answer from the options given below:

(1) Both A and R are true and R is the correct explanation of A.

(2) Both A and R are true but R is NOT the correct explanation of A.

(3) A is true but R is false.

(4) A is false but R is true.

108. Which of the following common sexually transmitted diseases is completely curable when detected early and treated properly?

(1) Genital herpes

(2) Gonorrhoea

(3) Hepatitis-B

(4) HIV Infection

109. The unique mammalian characteristics are:

(1) Hairs, lymphatic membrane and mammary gland

(2) hairs, pinna and mammary glands

(3) hairs, pinna and indirect development

(4) pinna, monocondylic skull and mammary glands

110. Radial symmetry is NOT found in adults of phylum _____.

(1) Ctenophora

(2) Hemichordata

(3) Coelenterata

(4) Echinodermata

111. Select the correct statements with reference to chordates.

A. Presence of a mid-dorsal, solid and double nerve cord.
B. Presence of closed circulatory system.
C. Presence of paired pharyngeal gill slits.
D. Presence of dorsal heart.
E. Triploblastic pseudocoelomate animals.

Choose the correct answer from the options given below:

(1) A, C and D only

(2) B and C only

(3) B, D and E only

(4) C, D and E only

112. The phenomenon of pleiotropism refers to

(1) presence of several alleles of a single gene controlling a single crossover.

(2) presences of two alleles, each of the two genes controlling a single trait.

(3) a single gene affecting multiple phenotypic expression.

(4) more than two genes affecting a single character.

113. Which of the following symbols represents mating between relatives in human pedigree analysis?

(1) A square (male) and a circle (female) joined by a single horizontal marriage/mating line.

(2) A square (male) and a circle (female) joined by a double horizontal line (consanguineous mating line).

(3) A square (male) and a circle (female) joined by a mating line with a vertical line descending to offspring (sibship).

(4) A filled square, a filled circle and a filled diamond (affected individuals/unknown sex symbols) on a sibship line.

---

114. Frequency of recombination between gene pairs on some chromosome as a measure of the distance between genes to map their position on chromosome, was used for the first time by

(1) Thomas Hunt Morgan

(2) Sutton and Boveri

(3) Alfred Sturtevant

(4) Henking

---

115. Broad palm with single palm crease is visible in a person suffering from

(1) Down's syndrome

(2) Turner's syndrome

(3) Klinefelter's syndrome

(4) Thalassemia

---

116. Which of the following statements are correct about Klinefelter's Syndrome?

A. This disorder was first described by Landon Down (1866).
B. Such an individual has overall masculine development. However, the feminine development is also expressed.
C. The affected individual is short statured.
D. Physical, psychomotor and mental development is retarded.
E. Such individuals are sterile.

Choose the correct answer from the options given below:

(1) A and B only

(2) C and D only

(3) B and E only

(4) A and E only

---

117. What is the role of RNA polymerase III in the process of transcription in eukaryotes?

(1) Transcribes precursor of mRNA

(2) Transcribes only snRNAs

(3) Transcribes rRNAs (28S, 18S and 5.8S)

(4) Transcribes tRNA, 5s rRNA and snRNA

---

118. Given below are two statements:
Statement I: In prokaryotes, the positively charged DNA is held with some negatively charged proteins in a region called nucleoid.
Statement II: In eukaryotes, the negatively charged DNA is wrapped around the positively charged histone octamer to form nucleosome.
In the light of the above statements, choose the correct answer from the options given below:

(1) Both Statements I and Statement II are true.

(2) Both statements I and Statement II are false.

(3) Statement I is correct but Statement II is false.

(4) Statement I is incorrect but Statement II is true.

---

119. Given below are two statements:

Statement I: The codon 'AUG' codes for methionine and phenylalanine.

Statement II: 'AAA' and 'AAG' both codons code for the amino acid lysine.

In the light of the above statements, choose the correct answer from the options given below:

(1) Statement I is correct but statement II is false
(2) Statement I is incorrect but statement II is true
(3) Both Statement I and Statement II are true
(4) Both Statement I and Statement II are false

120. Among eukaryotes, replication of DNA takes place in

(1) M phase
(2) S phase
(3) G1 phase
(4) G2 phase

121. Unequivocal proof that DNA is the genetic material was first proposed by

(1) Frederick Griffith
(2) Alfred Hershey and Martha Chase
(3) Avery, Macleoid and McCarthy
(4) Wilkins and Franklin

122. Expressed Sequence Tags (ESTs) refers to :

(1) Genes expressed as RNA
(2) Polypeptide expression
(3) DNA polymorphism
(4) Novel DNA sequences

123. Which one of the following is the sequence on corresponding coding strand, if the sequence on mRNA formed is as follows 5' AUCGAUCGAUCGAUCGAUCG AUCG AUCG 3'?

(1) 5' UAGCUAGCUAGCUAGCUA GCUAGC UAGC 3'
(2) 3' UAGCUAGCUAGCUAGCUA GCUAGCUAGC 5'
(3) 5' ATCGATCGATCGATCGATCG ATCGATCG 3'
(4) 3' ATCGATCGATCGATCGATCG ATCGATCG 5'

124. How many different proteins does the ribosome consist of?

(1) 80
(2) 60
(3) 40
(4) 20

125. Axile placentation is observed in (NEET 2023 (Phase 1))

(1) Mustard, Cucumber and Primrose
(2) China rose, Beans and Lupin
(3) Tomato, Dianthus and Pea
(4) China rose, Petunia and Lemon

126. Family Fabaceae differs from Solanaceae and Liliaceae. With respect to the stamens, pick out the characteristics specific to family Fabaceae but not found in Solanaceae or Liliaceae. (NEET 2023 (Phase 1))

(1) Diadelphous and Dithecous anthers
(2) Polyadelphous and epipetalous stamens
(3) Monoadelphous and Monothecous anthers
(4) Epiphyllous and Dithecous anthers

127. Given below are two statements:

Statement I: Endarch and exarch are the terms often used for describing the position of secondary xylem in the plant body.
Statement II: Exarch condition is the most common feature of the root system.

In the light of the above statements, choose the correct answer from the options given below:

(1) Both Statement I and Statement II are true.
(2) Both Statement I and Statement II are not false.
(3) Statement I is correct but Statement II is false.
(4) Statement I is incorrect but Statement II is true.

128. (Out of syllabus but asked in last 3 years) Given below are two statements: One is labelled as Assertion A and the other is labelled as Reason R:

Assertion A: Late wood has fewer xylary elements with narrow vessels.
Reason R: Cambium is less active in winters.

In the light of the above statements, choose the correct answer from the options given below:

(1) Both A and R are true and R is the correct explanation of A.
(2) Both A and R are true but R is NOT the correct explanation of A.
(3) A is true but R is false.
(4) A is false but R is true.

129. (Out of syllabus but asked in last 3 years) Identify the correct statements:

Statements:
A. Lenticels are the lens-shaped openings permitting the exchange of gases.
B. Bark formed early in the season is called hard bark.
C. Bark is a technical term that refers to all tissues exterior to vascular cambium.
D. Bark refers to periderm and secondary phloem.
E. Phellogen is single-layered in thickness.

Choose the correct answer:

(1) B, C and E only
(2) A and D only
(3) A, B and D only
(4) B and C only

130. Select the correct group/set of Australian Marsupials exhibiting adaptive radiation.

(1) Tasmanian wolf, Bobcat, Marsupial mole
(2) Numbat, Spotted cuscus, Flying phalanger
(3) Mole, Flying squirrel, Tasmanian tiger cat
(4) Lemur, Anteater, Wolf

131. Match List I with List II:

List I

A. Ringworm

B. Filariasis

C. Malaria

D. Pneumonia

List II

I. Haemophilus influenzae

II. Trichophyton

III. Wuchereria bancrofti

IV. Plasmodium vivax

Choose the correct answer from the options given below:

(1) A-II, B-III, C-IV, D-I

(2) A-II, B-III, C-I, D-IV

(3) A-III, B-II, C-I, D-IV

(4) A-III, B-II, C-IV, D-I

---

132. Match List I with List II:

List I

A. Heroin

B. Marijuana

C. Cocaine

D. Morphine

List II

I. Effect on cardiovascular system

II. Slow down body function

III. Painkiller

IV. Interfere with transport of dopamine

Choose the correct answer from the options given below:

(1) A-II, B-I, C-IV, D-III

(2) A-I, B-II, C-III, D-IV

(3) A-IV, B-III, C-II, D-I

(4) A-III, B-IV, C-I, D-II

---

133. In which blood corpuscles, the HIV undergoes replication and produces progeny viruses?

(1) TH cells

(2) B-lymphocytes

(3) Basophils

(4) Eosinophils

---

134. Which of the following is characteristic feature of cockroach regarding sexual dimorphism?

(Out of syllabus but asked in last 3 years)

(1) Dark brown body colour and anal cerci

(2) Presence of anal styles

(3) Presence of sclerites

(4) Presence of anal cerci

---

135. Match List I and List II.

List I
A. Mast cells
B. Inner surface of bronchiole
C. Blood
D. Tubular parts of nephron

List II
I. Ciliated epithelium
II. Areolar connective tissue
III. Cuboidal epithelium
IV. Specialised connective tissue

Choose the correct answer from the options given below:

(1) A-I, B-II, C-IV, D-III
(2) A-II, B-III, C-I, D-IV
(3) A-II, B-I, C-IV, D-III
(4) A-III, B-IV, C-II, D-I

---

136. In cockroach, excretion is brought about by

A. Phallic gland
B. Uricose gland
C. Nephrocytes
D. Fat body
E. Collaterial glands

Choose the correct answer from the options given below:

(Out of syllabus but asked in last 3 years)

(1) A and E only
(2) A, B and E only
(3) B, C and D only
(4) B and D only

---

137. Match List I with List II:

List I
A. Taenia
B. Paramoecium
C. Periplaneta
D. Pheretima

List II
I. Nephridia
II. Contractile vacuole
III. Flame cells
IV. Urecose gland

Choose the correct answer from the options given below:

(Out of syllabus but asked in last 3 years)

(1) A-I, B-II, C-III, D-IV
(2) A-I, B-II, C-IV, D-III
(3) A-III, B-II, C-IV, D-I
(4) A-II, B-I, C-IV, D-III

---

138. Given below are two statements:

Statement I: Ligaments are dense irregular tissue.

Statement II: Cartilage is dense regular tissue.

In the light of the above statements, choose the correct answer from the options given below:

(1) Both Statements I and II are true
(2) Both Statements I and II are false
(3) Statement I is true but Statement II is false
(4) Statement I is false, but Statement II is true

---

139. Which of the following are NOT considered as the part of endomembrane system?

A. Mitochondria
B. Endoplasmic Reticulum
C. Chloroplasts
D. Golgi complex
E. Peroxisomes

Choose the most appropriate answer from the options given below:

(1) B and D only
(2) A, C and E only
(3) A and D only
(4) A, D and E only

---

140. Which of the following functions is carried out by cytoskeleton in a cell?

(1) Nuclear division
(2) Protein synthesis
(3) Motility
(4) Transportation

---

141. Movement and accumulation of ions across a membrane against their concentration gradient can be explained by

(1) Osmosis

(2) Facilitated Diffusion

(3) Passive Transport

(4) Active transport

---

142. Cellulose does not form blue colour with Iodine because

(1) It is a disaccharide.

(2) It is a helical molecule.

(3) It does not contain complex helices and hence cannot hold iodine molecules.

(4) It breakes down when iodine reacts with it.

---

143. Given below are two statements:
Statement I: A protein is imagined as a line, the left end represented by first amino acid (C-terminal) and the right end represented by last amino acid (N-terminal)
Statement II: Adult human haemoglobin, consists of 4 subunits (two subunits of alpha type and two subunits of beta type.)
In the light of the above statements, choose the correct answer from the options given below:

(1) Both Statement I and Statement II are true.

(2) Both statement I and Statement II are false.

(3) Statement I is correct but Statement II is false.

(4) Statement I is incorrect but Statement II is true.

---

144. Given below are two statements:
Statement I: Low temperature preserves the enzyme in a temporarily inactive state whereas high temperature destroys enzymatic activity because proteins are denatured by heat.
Statement II: When the inhibitor closely resembles the substrate in its molecular structure and inhibits the activity of the enzyme, it is known as competitive inhibitor.
In the light of the above statements, choose the correct answer from the options given below:

(1) Both Statements I and II are true.

(2) Both statements I and II are false.

(3) Statement I is true but Statement II is false.

(4) Statement I is false, but Statement II is true.

---

145. Melonate inhibits the growth of pathogenic bacteria by inhibiting the activity of

(1) Sccinic dehydrogenase

(2) Amylase

(3) Lipase

(4) Dinitrogenase

---

146. Which of the following is not a cloning vector?

(1) BAC

(2) YAC

(3) pBR322

(4) Probe

---

147. Main steps in the formation of Recombinant DNA are given below. Arrange these steps in a correct sequence.
A. Insertion of recombinant DNA into the host cell.
B. Cutting of DNA at specific location by restriction enzyme.
C. Isolation of desired DNA fragment.
D. Amplification of gene of interest using PCR.
Choose the correct answer from the options given below:

(1) B, C, D, A

(2) C, A, B, D

(3) C, B, D, A

(4) B, D, A, C

---

148. During the purification process for recombinant DNA technology, addition of chilled ethanol precipitates out

(1) RNA
(2) DNA
(3) Histones
(4) Polysaccharides

149. Upon exposure to UV radiation, DNA stained with ethidium bromide will show

(1) Bright red colour
(2) Bright blue colour
(3) Bright yellow colour
(4) Bright orange colour

150. Which one of the following techniques does not serve the purpose of early diagnosis of a disease for its early treatment?

(1) Recombinant DNA Technology
(2) Serum and Urine analysis
(3) Polymerase Chain Reaction (PCR) technique
(4) Enzyme Linked Immuno-Sorbent Assay (ELISA) technique

151. Which of the following stages of meiosis involves division of centromere?

(1) Metaphase I
(2) Metaphase II
(3) Anaphase II
(4) Telophase

152. Select the correct statements.
A. Tetrad formation is seen during Leptotene.
B. During Anaphase, the centromeres split and chromatids separate.
C. Terminalization takes place during Pachytene.
D. Nucleolus, Golgi complex and ER are reformed during Telophase.
E. Crossing over takes place between sister chromatids of homologous chromosome.
Choose the correct answer from the options given below:

(1) A and C only
(2) B and D only
(3) C, A and E only
(4) B and E only

153. Given are two statements.
Statement 1: During G0 phase of cell cycle, the cell is metabolically inactive.
Statement 2: The centrosome undergoes duplication during S phase of interphase.
In the light of the above statements, choose the most appropriate answer from the options given below:

(1) Both Statements 1 and 2 are correct
(2) Both statements 1 and 2 are incorrect
(3) Statement 1 is correct, but Statement 2 is incorrect
(4) Statement 1 is incorrect, but Statement 2 is correct

154. Match List I with List II:

List I
A. M Phase
B. G2 Phase
C. G1 Phase
D. G1 Phase
List II
I. Proteins are synthesized
II. Inactive phase
III. Interval between mitosis and initiation of DNA replication
IV. Equational division
Choose the correct answer from the options given below:

(1) A-III, B-II, C-IV, D-I
(2) A-IV, B-II, C-I, D-III
(3) A-IV, B-I, C-II, D-III
(4) A-II, B-IV, C-I, D-III

---

155. The process of appearance of recombination nodules occurs at which sub stage of prophase I in meiosis?

(1) Zygotene
(2) Pachytene
(3) Diplotene
(4) Diakinesis

---

156. Match List I with List II:

List I (Interaction)
A. Mutualism
B. Commensalism
C. Amensalism
D. Parasitism

List II (Effect on Species A and B)
I. + (A), 0 (B)
II. – (A), 0 (B)
III. + (A), – (B)
IV. + (A), + (B)

Choose the correct answer from the options given below: (NEET 2023 (Phase 1))

(1) A-IV, B-II, C-I, D-III
(2) A-IV, B-I, C-II, D-III
(3) A-IV, B-III, C-I, D-II
(4) A-III, B-I, C-IV, D-II

---

157. Given below are two statements:

Statement I: Gause's 'Competitive Exclusion Principle' states that two closely related species competing for the same resources cannot co-exist indefinitely and the competitively inferior one will be eliminated eventually.
Statement II: In general, carnivores are more adversely affected by competition than herbivores.

In the light of the above statements, choose the correct answer from the options given below: (NEET 2023 (Phase 1))

(1) Both Statement I and Statement II are true.
(2) Both Statement I and Statement II are false.
(3) Statement I is correct but Statement II is false.
(4) Statement I is incorrect but Statement II is true.

---

158. Match List I with List II:

List I (Interacting species)
A. A Leopard and a Lion in a forest/grassland
B. A Cuckoo laying egg in a Crow's nest
C. Fungi and root of a higher plant in Mycorrhizae
D. A cattle egret and a Cattle in a field

List II (Name of Interaction)
I. Competition
II. Brood parasitism
III. Mutualism
IV. Commensalism

Choose the correct answer from the options given below: (NEET 2023 (Phase 1))

(1) A-I, B-II, C-III, D-IV
(2) A-I, B-II, C-IV, D-III
(3) A-III, B-IV, C-I, D-II
(4) A-II, B-III, C-I, D-IV

---

159. Match List I with List II:

List I
A. Logistic growth
B. Exponential growth
C. Expanding age pyramid
D. Stable age pyramid

List II
I. Unlimited resource availability condition
II. Limited resource availability condition
III. The percent individuals of pre-reproductive age is largest, followed by reproductive and post-reproductive age groups
IV. The percent individuals of pre-reproductive and reproductive age groups are same

Choose the correct answer from the options given below: (NEET 2023 (Phase 1))

(1) A-II, B-I, C-III, D-IV
(2) A-II, B-III, C-I, D-IV
(3) A-II, B-IV, C-I, D-III
(4) A-II, B-IV, C-III, D-I

---

160. Carnivorous animals - lions and leopards, occupy the same niche but lions predate mostly larger animals and leopards take smaller ones. This mechanism of competition is referred to as - (NEET 2023 (Odisha))

(1) Character displacement
(2) Altruism
(3) Resource partitioning
(4) Competitive exclusion

---

161. Between which among the following, the relationship is not an example of commensalism? (NEET 2023 (Odisha))

(1) Orchid and the tree on which it grows
(2) Cattle Egret and grazing cattle
(3) Sea Anemone and Clown fish
(4) Female wasp and fig species

162. Given below are two statements:

Statement I: Gause's competitive exclusion principle states that two closely related species competing for different resources cannot exist indefinitely.
Statement II: According to Gause's principle, during competition, the inferior will be eliminated. This may be true if resources are limiting.

In the light of the above statements, choose the correct answer from the options given below:

(1) Both Statement I and Statement II are false.
(2) Statement I is true but Statement II is false.
(3) Statement I is false but Statement II is true.
(4) Both Statement I and Statement II are true.

163. How many ATP and NADPH2 are required for the synthesis of one molecule of Glucose during Calvin cycle?

(1) 12 ATP and 12 NADPH2
(2) 18 ATP and 12 NADPH2
(3) 12 ATP and 16 NADPH2
(4) 18 ATP and 16 NADPH2

164. The reaction centre in PS II has an absorption maxima at

(1) 680 nm
(2) 700 nm
(3) 660 nm
(4) 780 nm

165. Which micronutrient is required for splitting of water molecule during photosynthesis?

(1) manganese
(2) molybdenum
(3) magnesium
(4) copper

166. Which of the following combinations is required for chemiosmosis?

(1) membrane, proton pump, proton gradient, ATP synthase
(2) membrane, proton pump, proton gradient, NADP synthase
(3) proton pump, electron gradient, ATP synthase
(4) proton pump, electron gradient, NADP synthase

167. In the equation GPP – R – NPP, GPP is Gross Primary Productivity, NPP is Net Primary Productivity, R here is _____.

(1) Photosynthetically active radiation
(2) Respiratory quotient
(3) Respiratory loss
(4) Reproductive allocation

168. Identify the correct statements:
A. Detritivores perform fragmentation.
B. The humus is further degraded by some microbes during mineralisation.
C. Water soluble inorganic nutrients go down into the soil and get precipitated by a process called leaching.
D. The detritus food chain begins with living organisms.
E. Earthworms break down detritus into smaller particles by a process called catabolism.
Choose the correct answer from the options given below:

(1) A, B, C only
(2) B, C, D only
(3) C, D, E only
(4) D, E, A only

169. Fatty acids are connected with the respiratory pathway through:

(1) Dihydroxy acetone phosphate
(2) Pyruvic acid
(3) Acetyl CoA
(4) α-Ketoglutaric acid

170. Given below are two statements: one is labelled as Assertion A and the other is labelled as Reason R.

Assertion A: ATP is used at two steps in glycolysis.

Reason R: First ATP is used in converting glucose into glucose-6-phosphate and second ATP is used in conversion of fructose-6-phosphate into fructose-1,6-diphosphate.

In the light of the above statements, choose the correct answer from the options given below:

(1) Both A and R are true and R is the correct explanation of A

(2) Both A and R are true but R is NOT the correct explanation of A

(3) A is true but R is false

(4) A is false but R is true

---

171. How many times decarboxylation occurs during each TCA cycle?

(1) Once

(2) Twice

(3) Thrice

(4) Many

---

172. Match List I with List II:

List I
A. Oxidative decarboxylation
B. Glycolysis
C. Oxidative phosphorylation
D. Tricarboxylic acid cycle

List II
I. Citrate synthase
II. Pyruvate dehydrogenase
III. Electron transport system
IV. EMP pathway

Choose the correct answer from the options given below:

(1) A-III, B-IV, C-II, D-I

(2) A-II, B-IV, C-I, D-III

(3) A-III, B-I, C-II, D-IV

(4) A-II, B-IV, C-III, D-I

---

173. Among 'The Evil Quartet' which one is considered the most important cause driving extinction of species?

(1) Habitat loss and fragmentation

(2) Over exploitation for economic gain

(3) Alien species invasions

(4) Co-extinctions

---

174. In tissue experiments, leaf mesophyll cells are put in a culture medium to form callus. This phenomenon may be called as:

(1) Differentiation

(2) Dedifferentiation

(3) Development

(4) Senescence

---

175. The phenomenon which is influenced by auxin and also played a major role in its discovery :

(1) Gravitropism

(2) Apical Dominance

(3) Phototropism

(4) Root initiation

176. Spraying of which of the following phytohormone on juvenile conifers helps in hastening the maturity period, that leads to early seed production?

(1) Indole-3-butyric Acid
(2) Gibberellic Acid
(3) Zeatin
(4) Abscisic Acid

---

177. Which hormone promotes internode/petiole elongation in deep water rice?

(1) GA3
(2) Kinetin
(3) Ethylene
(4) 2, 4-D

---

178. Match List-I with List-II
List-I:
(A) Auxin
(B) Gibberellin
(C) Cytokinin
(D) Ethylene
List-II:
(I) Promotes female flower formation in cucumber
(II) Overcoming apical dominance
(III) Increase in the length of grape stalks
(IV) Promotes flowering in pineapple
Choose the correct answer from the options given below:

(1) -(I), (B)-(III), (C)-(IV), (D)-(II)
(2) -(III), (B)-(II), (C)-(I), (D)-(IV)
(3) -(II), (B)-(I), (C)-(IV), (D)-(III)
(4) -(IV), (B)-(III), (C)-(II), (D)-(I)

---

179. Removal of shoot tips is a very useful technique to boost the production of tea-leaves. This is because

(1) Gibberellins prevent bolting and are inactivated
(2) Auxins prevent leaf drop at early stages
(3) Effect of auxins is removed and growth of lateral buds is enhanced.
(4) Gibberellins delay senescence of leaves.

---

180. In order to increase the yield of sugarcane crop, which of the following plant growth regulators should be sprayed?

(1) Ethylene
(2) Auxins
(3) Gibberellins
(4) Cytokinins

---

181. Vital capacity of lung is _____.

(1) IRV + ERV
(2) IRV + ERV + TV + RV
(3) IRV + ERV + TV - RV
(4) IRV + ERV + TV

---

182. Which of the following statements are correct?

A. Basophils are most abundant cells of the total WBCs.
B. Basophils secrete histamine, serotonin and heparin.
C. Basophils are involved in inflammatory response.
D. Basophils have kidney shaped nucleus.
E. Basophils are agranulocytes.

Choose the correct answer:

(1) D and E only
(2) C and E only
(3) B and C only
(4) A and B only

---

183. Match List I with List II:

List I
A. P-wave
B. Q-wave
C. QRS complex
D. T-wave

List II
I. Beginning of systole
II. Repolarisation of ventricles
III. Depolarisation of atria
IV. Depolarisation of ventricles

Choose the correct answer from the options given below:

(1) A-III, B-I, C-IV, D-II
(2) A-IV, B-III, C-II, D-I
(3) A-II, B-IV, C-I, D-III
(4) A-I, B-II, C-III, D-IV

---

184. Which one of the following statements is correct ?

(1) The atrioventricular node (AVN) generates an action potential to stimulate atrial contraction
(2) The tricuspid and the bicuspid valves open due to the pressure exerted by the simultaneous contraction of the atria
(3) Blood moves freely from atrium to the ventricle during joint diastole
(4) Increased ventricular pressure causes closing of the semilunar valves

---

185. Given below are two statements: One is labelled as Assertion A and the other is labelled as Reason R:

Assertion (A): Nephrons are of two types: Cortical & Juxta medullary, based on their relative position in cortex and medulla.
Reason (R): Juxta medullary nephrons have short loop of Henle whereas, cortical nephrons have longer loop of Henle.

In the light of the above statements, choose the correct answer from the options given below:

(1) Both A and R are true and R is the correct explanation of A
(2) Both A and R are true but R is NOT the correct explanation of A
(3) A is true but R is false
(4) A is false but R is true

186. Which of the following statements are correct?

A. An excessive loss of body fluid from the body switches off osmoreceptors.
B. ADH facilitates water reabsorption to prevent diuresis.
C. ANF causes vasodilation.
D. ADH causes increase in blood pressure.
E. ADH is responsible for decrease in GFR.

Choose the correct answer from the options given below:

(1) A and B only
(2) B, C and D only
(3) A, B and E only
(4) C, D and E only

187. The Cockroach is :

(1) Ureotelic only
(2) Ureotelic and Uricotelic
(3) Ammonotelic only
(4) Uricotelic only

188. In cockroach, excretion is brought about by

A. Phallic gland
B. Urecose gland
C. Nephrocytes
D. Fat body
E. Collaterial glands

Choose the correct answer from the options given below:

(1) A and E only
(2) A, B and E only
(3) B, C and D only
(4) B and D only

189. Match List I with List II:

List I
A. Taenia
B. Paramoecium
C. Periplaneta
D. Pheretima

List II
I. Nephridia
II. Contractile vacuole
III. Flame cells
IV. Urecose gland

Choose the correct answer from the options given below:

(1) A-I, B-II, C-III, D-IV
(2) A-I, B-II, C-IV, D-III
(3) A-III, B-II, C-IV, D-I
(4) A-II, B-I, C-IV, D-III

190. Given below are two statements : one is labelled as Assertion (A) and the other is labelled as Reason (R).

Assertion (A) : Ascending limb of loop of Henle is impermeable to water and allows transport of electrolytes actively or passively.
Reason (R) : Dilution of filtrate takes place due to efflux of electrolytes in the medullary fluid.

In the light of the above statements, choose the correct answer from the options given below :

(1) Both (A) and (R) are true and (R) is the correct explanation of (A)

(2) Both (A) and (R) are true but (R) is not the correct explanation of (A)

(3) is true but (R) is false

(4) is false but (R) is true

191. Match List I with List II:

List I (Type of Joint)
A. Cartilaginous Joint
B. Ball and Socket Joint
C. Fibrous Joint
D. Saddle Joint

List II (Found between)
I. Between flat skull bones
II. Between adjacent vertebrae in vertebral column
III. Between carpal and metacarpal of thumb
IV. Between Humerus and Pectoral Girdle

Choose the correct answer from the options given below:

(1) A-III, B-I, C-II, D-IV

(2) A-II, B-IV, C-I, D-III

(3) A-I, B-IV, C-III, D-II

(4) A-II, B-IV, C-III, D-I

192. Which of the following statements are correct regarding skeletal muscle?
A. Muscle bundles are held together by collagenous connective tissue layer called fascicle.
B. Sarcoplasmic reticulum of muscle fibre is a store house of calcium ions.
C. Striated appearance of skeletal muscle fibre is due to distribution pattern of actin and myosin proteins.
D. M line is considered as functional unit of contraction called sarcomere.
Choose the most appropriate answer from the options given below:

(1) A, B and C only

(2) B and C only

(3) A, C and D only

(4) C and D only

Answer Key

1.B	**2**.A	**3**.D	**4**.C	**5**.D	**6**.A	**7**.A	**8**.C	**9**.B	**10**.A	**11**.C
12.C	**13**.C	**14**.C	**15**.C	**16**.C	**17**.A	**18**.D	**19**.C	**20**.D	**21**.A	**22**.C
23.D	**24**.C	**25**.C	**26**.B	**27**.C	**28**.C	**29**.B	**30**.B	**31**.D	**32**.C	**33**.D
34.C	**35**.C	**36**.C	**37**.B	**38**.C	**39**.D	**40**.C	**41**.D	**42**.C	**43**.B	**44**.A
45.A	**46**.D	**47**.D	**48**.B	**49**.B	**50**.D	**51**.B	**52**.B	**53**.B	**54**.C	**55**.A
56.B	**57**.B	**58**.C	**59**.C	**60**.A	**61**.C	**62**.A	**63**.C	**64**.C	**65**.A	**66**.C
67.A	**68**.B	**69**.A	**70**.C	**71**.B	**72**.A	**73**.B	**74**.D	**75**.B	**76**.C	**77**.D
78.A	**79**.D	**80**.C	**81**.A	**82**.D	**83**.A	**84**.C	**85**.A	**86**.C	**87**.B	**88**.B

89.C	**90**.D	**91**.D	**92**.A	**93**.B	**94**.C	**95**.A	**96**.A	**97**.C	**98**.A	**99**.A
100.D	**101**.A	**102**.B	**103**.C	**104**.A	**105**.B	**106**.B	**107**.D	**108**.B	**109**.B	**110**.B
111.B	**112**.C	**113**.B	**114**.C	**115**.A	**116**.C	**117**.D	**118**.D	**119**.B	**120**.B	**121**.B
122.A	**123**.C	**124**.A	**125**.D	**126**.A	**127**.D	**128**.A	**129**.B	**130**.B	**131**.A	**132**.A
133.A	**134**.B	**135**.C	**136**.C	**137**.C	**138**.B	**139**.B	**140**.C	**141**.D	**142**.C	**143**.D
144.A	**145**.A	**146**.D	**147**.C	**148**.B	**149**.D	**150**.B	**151**.C	**152**.B	**153**.D	**154**.C
155.B	**156**.B	**157**.C	**158**.A	**159**.A	**160**.C	**161**.D	**162**.C	**163**.B	**164**.A	**165**.A
166.A	**167**.C	**168**.A	**169**.C	**170**.A	**171**.B	**172**.D	**173**.A	**174**.B	**175**.C	**176**.B
177.C	**178**.D	**179**.C	**180**.C	**181**.D	**182**.C	**183**.A	**184**.C	**185**.C	**186**.B	**187**.D
188.C	**189**.C	**190**.B	**191**.B	**192**.A						

© MedicNEET · medicneet.com · Reproduced for practice. Not for redistribution. Solve interactively: https://www.medicneet.com/open?paper=neet-2023-phase-1&src=pyq_pdf