MedicNEET

NEET 2026 (May) — Previous Year Question Paper

180 in-syllabus PYQs from NEET 2026 (May), reproduced by MedicNEET for practice.

Solve this paper in the real timed exam environment and get a brutal weak-area analysis — scan or open: https://www.medicneet.com/open?paper=neet-2026-may&src=pyq_pdf

Physics · 45 Qs

1. Which of the following statements are correct?
A. Inside a conductor, the electrostatic field is zero.
B. Electric field at the surface of a charged conductor does not depend on its surface charge density.
C. The interior of a charged conductor can have no excess charge in the static situation.
D. At the surface of a charged conductor, the electrostatic field must be normal to the surface at every point.
E. The electrostatic potential is zero everywhere inside a charged conductor.

(1) A, B and D only
(2) A, C and E only
(3) A, C and D only
(4) C, D and E only

2. In a vernier calliper, 20 VSD coincide with 16 MSD (each division of length 1 mm). The least count of the vernier calliper is:

(1) 0.2 cm
(2) 0.01 cm
(3) 0.02 cm
(4) 0.1 cm

3. The speed of light in vacuum is taken as unity. If light takes 6 min 40 s to reach the Earth from the Sun, the distance between the Sun and the Earth in the new unit is:

(1) 3×10^8
(2) 500
(3) 3×10^{10}
(4) 400

4. Each side of a metallic cube of mass 5.580 kg is measured to be 9.0 cm. Keeping the significant figures in view, the density of the material of the cube can be best expressed as $X \times 10^3$ kg m^{-3}, where the value of X is:

(1) 7.654
(2) 7.6
(3) 7.65
(4) 7.7

5. Five capacitors of capacitances C1 = C² = C3 = C4 = 10 uF and C5 = 2.5 uF are connected as shown, along with a battery of 50 V. The equivalent capacitance and the charges on each capacitor respectively are:

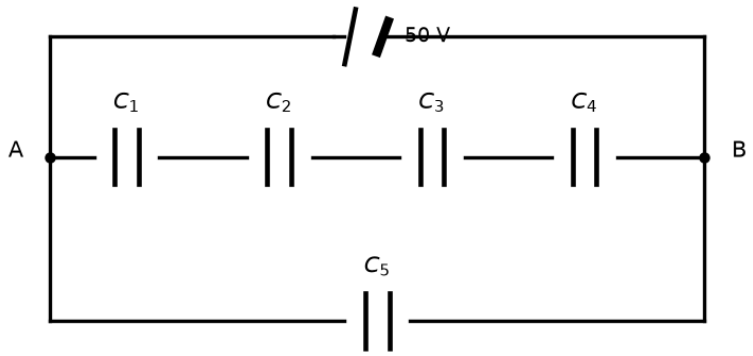

(1) 5 uF, 125 uC on C1 to C4 and 25 uC on C5

(2) 5 uF, 125 uC on all capacitors

(3) 5 uF, 250 uC on all capacitors

(4) 4 uF, 250 uC on C1 to C4 and 125 uC on C5

6. Consider two uncharged capacitors of equal capacitance 200 pF. One of them is charged by a 100 V supply and disconnected. Now this capacitor is connected to the uncharged capacitor. The amount of electrostatic energy lost in the process is:

(1) 0.5×10^{-6} J

(2) 1.0 J

(3) 1.0×10^{-6} J

(4) 0.5 J

7. The following plots show variation of velocity (v) with time (t) of a ball thrown vertically upward, and falling back. Which of the following plots is/are correct? A. B. C. D. E.

(1) C only

(2) D only

(3) B only

(4) A and E only

8. When a ruler falls vertically, 5 different persons catch it with different reaction times. (g = 9.8 m s–2) A. Person A has reaction time of 0.20 s. B. Person B has reaction time of 0.22 s. C. Person C has reaction time of 0.18 s. D. Person D has reaction time of 0.19 s. E. Person E has reaction time of 0.21 s. What is the correct order of the distance travelled by the ruler for each person?

(1) B > E > A > C > D

(2) C>D>A>B>E

(3) B > E > A > D > C

(4) C>D>A>E>B

9. A ball is thrown vertically upward and falls back to the thrower. Which velocity (v)-time (t) graph correctly represents its motion? (upward taken positive)

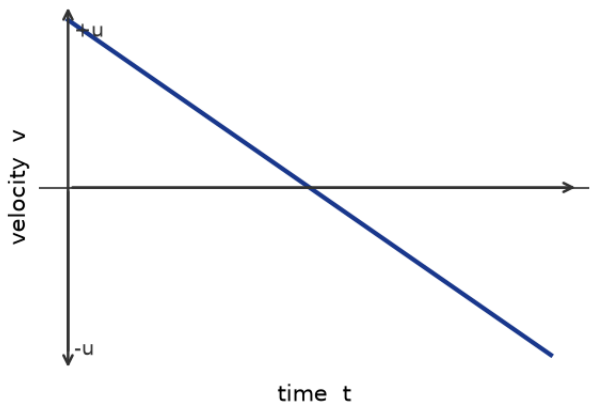

(1) v stays positive throughout

(2) horizontal straight line

(3) a straight line of constant negative slope, crossing v = 0

(4) a curved (parabolic) line

---

10. A ruler is dropped vertically and five persons try to catch it. Their reaction times are A = 0.20 s, B = 0.22 s, C = 0.18 s, D = 0.19 s and E = 0.21 s. The correct order of the distance travelled by the ruler before being caught by each person is:

(1) C > D > A > E > B

(2) A > B > C > D > E

(3) B > E > A > D > C

(4) B > A > E > C > D

---

11. The magnitude and direction of the acceleration produced in a body of mass 5 kg when two mutually perpendicular forces 8 N and 6 N act on it are respectively:

(1) $20\ \mathrm{m/s^2};\ \tan^{-1}\frac{4}{3}$ with the 8 N force

(2) $2\ \mathrm{m/s^2};\ \tan^{-1}\frac{3}{4}$ with the 6 N force

(3) $2\ \mathrm{m/s^2};\ \tan^{-1}\frac{4}{3}$ with the 8 N force

(4) $2\ \mathrm{m/s^2};\ \tan^{-1}\frac{3}{4}$ with the 8 N force

---

12. A box of mass 15 kg is kept on the floor of a stationary trolley. The coefficient of static friction between the box and the trolley is 0.12. Keeping the box stationary relative to the trolley, the maximum horizontal acceleration with which the trolley can be moved is (g = 10 m/s²):

(1) 2.1 m/s²

(2) 1.8 m/s²

(3) 1.5 m/s²

(4) 1.2 m/s²

---

13. A 100-turn closely wound circular coil of radius 5 cm has a magnetic field of 3.14×10^{-3} T at its centre. The current flowing through the coil, and the magnitude of the magnetic moment of this coil are, respectively: (Take $\mu_0 = 4\pi \times 10^{-7}$ T m/A)

(1) 2 A, 10 A m²

(2) 2.5 A, 20 A m²

(3) 2 A, 4 A m²

(4) 2.5 A, 2 A m²

---

14. A galvanometer of resistance 100 Ω gives full scale deflection for a current of 1 mA. It is converted into an ammeter of range 0 – 10 A. The shunt required is:

(1) 0.01 Ω

(2) 0.10 Ω

(3) 1.0 Ω

(4) 0.001 Ω

15. The figure shows a long straight solid wire of circular cross-section of radius 'a' carrying steady current I. The current I is uniformly distributed across its cross-section. The plot which correctly represents the variation of magnetic field (B) with distance (r) from the axis of the conductor is:

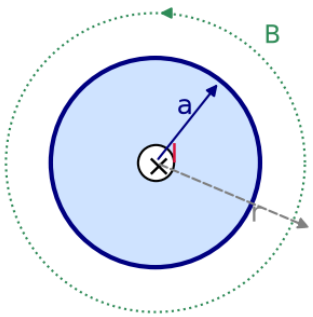

(1) B rises linearly for r < a, then falls as 1/r for r > a

(2) B falls as 1/r for r < a, then rises linearly for r > a

(3) B is constant for r < a, then falls as 1/r for r > a

(4) B rises linearly for r < a, then stays constant for r > a

16. The sum of the kinetic energy and potential energy of a simple pendulum bob is 0.02 J. The speed of the bob at the equilibrium position is approximately (mass of the bob = 20 g)

(1) 0.2 m/s

(2) 1.41 m/s

(3) 14.1 m/s

(4) 2.0 m/s

17. The power of a crane, which lifts a mass of 1000 kg to a height of 20 m in 10 s, is ($g=9.8\ m/s^2$)

(1) 19.6 W

(2) 39.2 W

(3) 19.6 kW

(4) 39.2 kW

18. A rectangular wire loop of sides 8 cm and 3 cm with a small cut, is moving out of a region of uniform magnetic field of magnitude 0.3 T directed normal to the plane of the loop. The emf developed across the cut, if the velocity of the loop is 2 cm s^{-1}, in a direction normal to the shorter side of the loop, will be:

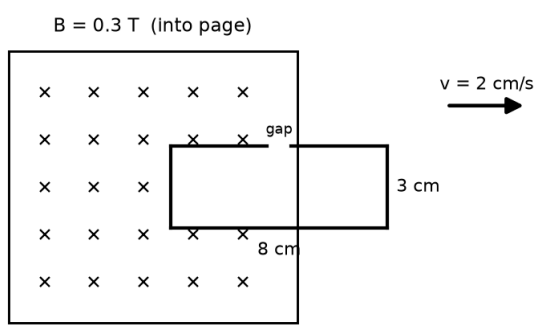

(1) 4.8×10^{-4} volt

(2) 1.2×10^{-4} volt

(3) 1.3×10^{-4} volt

(4) 1.8×10^{-4} volt

19. A flywheel's angular speed increases uniformly from 600 rpm to 1200 rpm in 10 s. The number of revolutions completed in this time is:

(1) 900 **(2)** 600

(3) 150 **(4)** 300

---

20. A thin wire of length L and linear mass density m (mass per unit length) is bent into a circular ring lying in the x-y plane with centre C. The moment of inertia of the ring about a tangential axis yy' lying in the plane of the ring is:

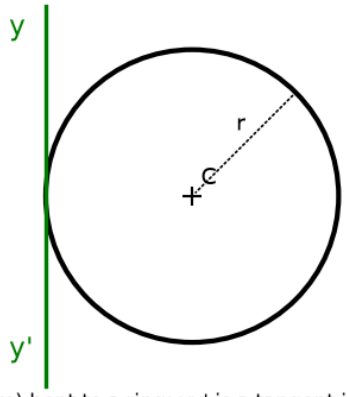

Wire (length L, λ=m) bent to a ring; yy' is a tangent in the plane of the ring

(1) $mL^3/(8\pi^2)$ **(2)** $3\,m\,L^3/(8\pi^2)$

(3) $m\,L^3/(8\pi^3)$ **(4)** $3\,m\,L^2/(8\pi^2)$

---

21. The peak value of an alternating current is 5 A and frequency is 60 Hz. How long will the current, starting from zero, take to reach the peak value?

(1) 1/120 s **(2)** 1/60 s

(3) 1/30 s **(4)** 1/240 s

---

22. An ac circuit contains a resistance of 1 kΩ, a capacitor of 0.1 μF and an inductor of 1 mH connected in series. The resonance frequency of the circuit is approximately:

(1) 13.5 kHz **(2)** 10.1 kHz

(3) 20.7 kHz **(4)** 15.9 kHz

---

23. The work done to raise a mass m from the surface of the earth to a height h equal to the radius of the earth R is:

(1) mgR **(2)** 2mgR

(3) ½mgR **(4)** (3/2)mgR

---

24. The work done to raise a mass m from the surface of the earth to a height equal to the radius of the earth R is:

(1) 2mgR **(2)** mgR/4

(3) mgR **(4)** mgR/2

---

25. Match List I with List II: List-I (Electromagnetic wave) List-II (Production) A. Microwave I. Electrons in atoms emit light when they move from a higher energy level to a lower energy level B. Visible light II. Radioactive decay of nucleus C. Gamma rays III. Vibration of atoms and molecules D. Infra-red rays IV. Klystron valve or magnetron valve Choose the correct answer from the options given below:

(1) A–III, B–I, C–II, D–IV

(2) A–III, B–IV, C–I, D–II

(3) A–IV, B–I, C–II, D–III

(4) A–IV, B–III, C–II, D–I

---

26. Match List I (Electromagnetic wave) with List II (Production) and choose the correct match.

List I
(A) Microwave
(B) Visible light
(C) Gamma rays
(D) Infrared

List II
(I) Electron transitions in atoms
(II) Radioactive decay (nuclear transitions)
(III) Vibration of atoms and molecules
(IV) Klystron or magnetron valve

Choose the correct match:

(1) A-III, B-I, C-II, D-IV

(2) A-III, B-IV, C-I, D-II

(3) A-IV, B-I, C-II, D-III

(4) A-IV, B-III, C-II, D-I

---

27. Match List I with List II. List I: A. Young's Modulus, B. Compressibility, C. Bulk Modulus, D. Poisson's Ratio. List II: I. (Δd/d)/(ΔL/L), II. FL/(A.ΔL), III. -(1/V)(ΔV/P), IV. -V.P/ΔV. Choose the correct answer.

(1) A-IV, B-I, C-II, D-III

(2) A-III, B-II, C-I, D-IV

(3) A-I, B-IV, C-III, D-II

(4) A-II, B-III, C-IV, D-I

---

28. A resistor is connected to a battery of emf 12 V and internal resistance 2 Ω. If the current is 0.6 A, the terminal voltage of the battery is:

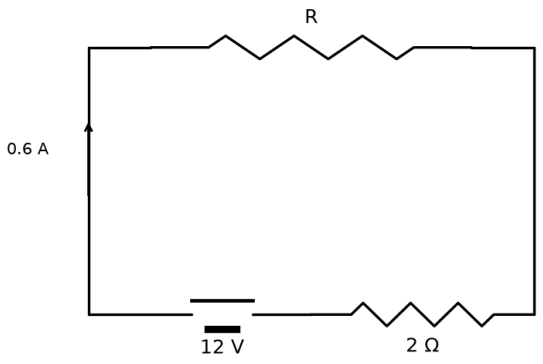

(1) 10 V

(2) 1.2 V

(3) 12 V

(4) 10.8 V

29. In a metre bridge experiment, the positions of the cell E and galvanometer G are interchanged. In the galvanometer we shall observe:

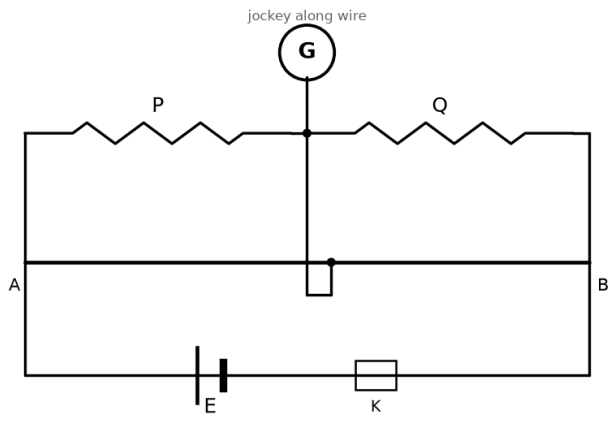

(1) only left deflection

(2) no deflection irrespective of jockey position

(3) only right deflection

(4) both left and right deflection; no deflection at the balance point

30. A room heater is rated 400 W, 220 V. If the supply voltage drops to 200 V, the power consumed (approximately) is:

(1) 200 W

(2) 400 W

(3) 331 W

(4) 121 W

31. A uniform metallic wire of resistance 4 Ω is bent to form a square loop ABCD. A resistance of 2 Ω is connected between B and D, and a battery of 2 V across A and C. The value of current i is:

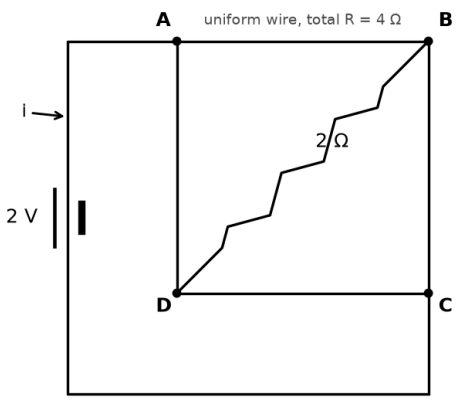

(1) 2 A

(2) 8 A

(3) 4.5 A

(4) 4 A

32. A submarine is designed to withstand an absolute pressure of 100 atm. How deep can it go below the water surface? (density of water = 1000 kg m^{-3}, 1 atm = 1×10^5 Pa, g = 10 m s^{-2})

(1) 990 m

(2) 9900 m

(3) 99 m

(4) 9000 m

33. A ray of monochromatic light is passing through an equilateral prism (ABC) as shown in the figure. The refracted ray (QR) is parallel to its base (BC) and the angle of incidence (i) is 50°. Then the angle of deviation (δ) is:

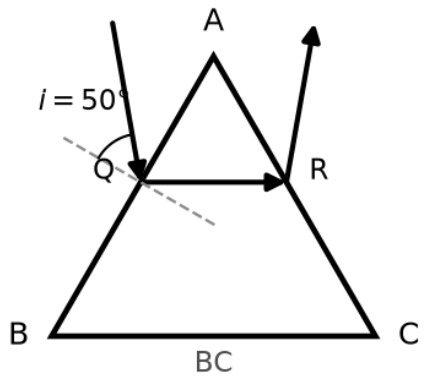

(1) 45°
(2) 35°
(3) 40°
(4) 55°

34. In a concave lens, a ray of light emanating from the object parallel to the principal axis of the lens, after refraction:

(1) passes through 2F, which is the radius of curvature of the lens.
(2) appears to diverge from the first principal focus.
(3) emerges parallel to the principal axis.
(4) passes through the second principal focus.

35. In interference and diffraction, light energy is redistributed. If it reduces in one region, producing a dark fringe, it increases in another region, producing a bright fringe.

A. As there is no gain or loss of energy, these phenomena are consistent with the principle of conservation of energy.

B. Diffraction and interference are characteristics exhibited only by light waves.

Choose the correct answer.

(1) A is true and B is also true
(2) A is false, but B is true
(3) A is true, but B is false
(4) Both A and B are false

36. In Young's double slit experiment, using monochromatic light of wavelength λ, the intensity of light at a point on the screen where the path difference is λ is K units. The intensity of light at a point where the path difference is λ/3 will be

(1) K/4
(2) K
(3) 2K
(4) K/2

37. For a metal of work function 6.6 eV, which of the following wavelengths of incident radiation does NOT give rise to the photoelectric effect? (Take Planck's constant as 6.6×10^{-34} J·s)

(1) 100 nm
(2) 150 nm
(3) 200 nm
(4) 50 nm

38. Match List I with List II.
List-I: A. $E = h\nu$ B. Diffraction and interference C. $\lambda = h/p$ D. Compton effect
List-II: I. de Broglie wavelength II. Particle nature of light III. Wave nature of light IV. Energy of photon
Choose the correct answer from the options given below:

(1) A-IV, B-I, C-II, D-III
(2) A-IV, B-III, C-II, D-I
(3) A-I, B-IV, C-III, D-II
(4) A-IV, B-III, C-I, D-II

---

39. An electric heater supplies heat to a system at a rate of 100 W. If the system performs work at a rate of 75 J/s, the rate at which internal energy increases is

(1) 75 W
(2) 100 W
(3) 125 W
(4) 25 W

---

40. At a certain temperature, during a process, 500 J is absorbed by the system and 200 J of work is done by the system. The change in internal energy of the system is

(1) 400 J
(2) 300 J
(3) 700 J
(4) 500 J

---

41. In the first excited state of hydrogen atom, the energy of its electron is –3.4 eV. The radial distance of the electron from the hydrogen nucleus in this case is approximately: (Take 1 eV = 1.6×10^{-19} J, e = 1.6×10^{-19} C and $1/(4\pi\varepsilon_0) = 9 \times 10^9$ N m²/C²)

(1) 2.1×10^{-9} m
(2) 2.1×10^{-8} m
(3) 2.1×10^{-10} m
(4) 2.1×10^{-11} m

---

42. A flask contains argon and chlorine in the ratio of 2 : 1 by mass. The temperature of the mixture is 27 °C. The ratio of root mean square speeds of the molecules of the two gases (v_rms^Ar / v_rms^Cl) is: (Atomic mass of argon = 40.0 u and molecular mass of chlorine = 70.0 u)

(1) √7 / 2
(2) √7 / 4
(3) 7/2
(4) 2/7

---

43. An unknown nucleus has a nuclear density of 2.29×10^{17} kg/m³ and a mass of 19.926×10^{-27} kg. Its mass number A is approximately: (Take $R_0 = 1.2 \times 10^{-15}$ m, $4\pi = 12.56$)

(1) 12
(2) 20
(3) 16
(4) 19

---

44. Four statements are given below (A is the mass number):

A. The volume of a nucleus is proportional to A^(1/3).
B. The volume of a nucleus is proportional to A.
C. The difference in mass of an atom and its nucleus is called the mass defect.
D. The difference in mass of a nucleus and its constituents is called the mass defect.

Choose the correct answer from the options given below:

(1) A and C are true, but B and D are false
(2) B and C are true, but A and D are false
(3) A and D are true, but B and C are false
(4) B and D are true, but A and C are false

45. Mass Density ⇒ 4 M πR 3 = 3 ρ ⇒ 3 4 M π □R (A)1/3 □□ = 3 □ 0 ρ ⇒ 4 M πR03 A = 3 ρ ⇒ 3 19.926 × 10 –27 × 3 M ≈ 12 A= × = ρ 4π × R03 2.29 × 1017 × 12.56 × (1.2 × 10–15)3 Savitha, a XI standard student, while conducting an experiment to determine the effective length of a simple pendulum L, notes down the data of time taken to complete 30 oscillations as 60 s and hence calculates the length of the simple pendulum as: (Take π2 = 9.8, and g = 9.8 m/s2)

(1) 0.75 m

(2) 1.5 m

(3) 2 m

(4) 1m

Chemistry · 45 Qs

46. Identify the correct statements:
(A) The molality of 2.5 g of ethanoic acid (Molar mass: $60\ \mathrm{g\ mol^{-1}}$) in 75 g of benzene solution is 0.556 m.
(B) The molarity of a solution containing 5 g of NaOH (molar mass: $40\ \mathrm{g\ mol^{-1}}$) in 450 mL of solution is 0.278 M at 298 K.
(C) Aquatic species are more comfortable in cold water.
(D) The solubility of a gas increases with decrease in pressure.
(E) For a binary mixture of A and B, the number of moles of A and B are n_A and n_B respectively. The mole fraction of B will be $x_B = \frac{n_A}{n_A+n_B}$.

(1) A, B and C only

(2) A and B only

(3) A and C only

(4) A, D and E only

47. A mixture of chloroform and acetone forms a solution with negative deviation from Raoult's law due to:

(1) Increase in escaping tendency of molecules of each component.

(2) Formation of hydrogen bonding between acetone and chloroform.

(3) Stronger intermolecular forces between chloroform molecules than those between chloroform and acetone molecules.

(4) Repulsive forces.

48. The number of hydrogen atoms present in 5.4 g of urea is (molar mass of urea = 60 g mol^{-1}; $N_A = 6.022 \times 10^{23}$ mol^{-1})

(1) 1.084×10^{23}

(2) 1.084×10^{22}

(3) 2.168×10^{22}

(4) 2.168×10^{23}

49. When 1 dm^3 of $\mathrm{CO_2}$ gas is passed over hot coke, the volume of the gaseous mixture after complete reaction at STP becomes 1.4 dm^3. The composition of the gaseous mixture at STP is

(1) 0.8 dm^3 CO, 0.8 dm^3 $\mathrm{CO_2}$

(2) 0.8 dm^3 CO, 0.6 dm^3 $\mathrm{CO_2}$

(3) 0.6 dm^3 CO, 0.8 dm^3 $\mathrm{CO_2}$

(4) 0.6 dm^3 CO, 0.4 dm^3 $\mathrm{CO_2}$

50. A solution of copper sulphate is electrolysed for 10 minutes with a current of 1.5 amperes. The mass of copper deposited at the cathode is:
(Given: Molar mass of $\mathrm{Cu} = 63$ g mol^{-1}; $1\,F = 96487$ C mol^{-1})

(1) 1.7018 g

(2) 0.2938 g

(3) 2.4036 g

(4) 0.5876 g

51. Calculate the emf of the half cell given below:

$$\mathrm{Pt}\,(\mathrm{s})\mid \mathrm{H_2}\,(\mathrm{g}, 2\mathrm{atm})\mid \mathrm{HCl}\,(\mathrm{aq}, 0.02\mathrm{M})$$

E^\circ_{\ce{H+/H2}} = 0\ \text{V}

(Given: $\frac{2.303RT}{F} = 0.059, \log 2 = 0.3010$)

(1) $-0.109\ \mathrm{V}$

(2) $0.035\ \mathrm{V}$

(3) $-0.035\ \mathrm{V}$

(4) $0.109\ \mathrm{V}$

---

52. Match List-I with List-II:

List-I (n, l)
(A) $n = 2, l = 1$
(B) $n = 4, l = 0$
(C) $n = 5, l = 3$
(D) $n = 3, l = 2$

List-II (Orbital)
(I) $3d$
(II) $2p$
(III) $4s$
(IV) $5f$

Choose the correct answer from the options given below:

(1) A-IV, B-II, C-III, D-I

(2) A-II, B-III, C-I, D-IV

(3) A-II, B-III, C-IV, D-I

(4) A-I, B-II, C-III, D-IV

---

53. A bulb is rated at 150 watt, converting 8% of its energy into light. If the energy of one photon is 4.42×10^{-19} J, how many photons are emitted by the bulb per second?

(1) 2.71×10^{19}

(2) 4.06×10^{19}

(3) 27.2×10^{19}

(4) 1.35×10^{19}

---

54. The calculated 'spin-only' magnetic moment of Ti^{2+} $(3d^2)$ is:

(1) 5.92 BM

(2) 3.87 BM

(3) 2.84 BM

(4) 4.90 BM

---

55. Match List I with List II :

List-I (Order of reaction)
(A) Zero order
(B) First order
(C) Second order
(D) Third order

List-II (Unit of rate constant)
(I) $\mathrm{mol}^{-1}\,\mathrm{L}\,\mathrm{s}^{-1}$
(II) $\mathrm{mol}^{-2}\,\mathrm{L}^{2}\,\mathrm{s}^{-1}$
(III) s^{-1}
(IV) $\mathrm{mol}\,\mathrm{L}^{-1}\,\mathrm{s}^{-1}$

Choose the correct answer from the options given below :

(1) (A)-(IV), (B)-(II), (C)-(I), (D)-(III)
(2) (A)-(IV), (B)-(III), (C)-(I), (D)-(II)
(3) (A)-(IV), (B)-(III), (C)-(II), (D)-(I)
(4) (A)-(I), (B)-(II), (C)-(III), (D)-(IV)

56. For a certain reaction $\mathrm{R} \longrightarrow \mathrm{Product}$, the plot of concentration $[R]$ versus time is a straight line with a constant negative slope, as shown in the graph. The order of the reaction is:

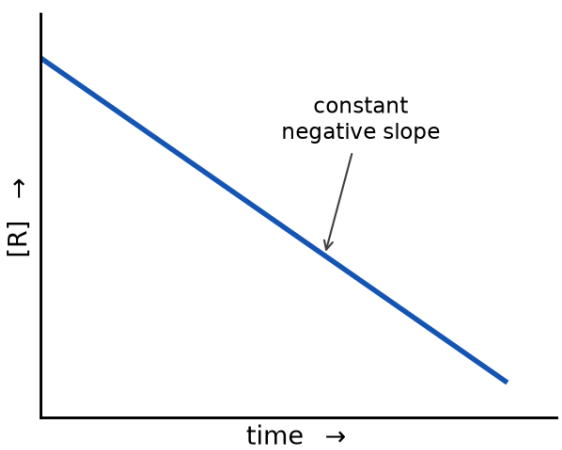

(1) 0
(2) 1
(3) 2
(4) 2.5

57. Given below is an expression for the rate constant of a first-order reaction occurring at a certain temperature T (K):

$$\ln k = 14.34 - \frac{1.25\times10^{4}}{T}$$

The energy of activation in $\mathrm{kcal\ mol}^{-1}$ for the reaction is:
(Given: k in s^{-1}, $R = 1.987\ \mathrm{cal\ mol}^{-1}\,\mathrm{K}^{-1}$)

(1) 24.84
(2) 14.34
(3) 18.63
(4) 12.42

58. The correct order of increasing metallic character of Na, Be, P, Mg and Si is:

(1) $\mathrm{P} < \mathrm{Si} < \mathrm{Be} < \mathrm{Mg} < \mathrm{Na}$
(2) $\mathrm{P} < \mathrm{Si} < \mathrm{Na} < \mathrm{Mg} < \mathrm{Be}$
(3) $\mathrm{P} < \mathrm{Mg} < \mathrm{Be} < \mathrm{Si} < \mathrm{Na}$
(4) $\mathrm{Be} < \mathrm{Si} < \mathrm{P} < \mathrm{Mg} < \mathrm{Na}$

59. Identify the incorrect statement from the following:

(1) The largest and the smallest species among Mg, Mg^{2+}, Al and Al^{3+} are Al and Mg^{2+} respectively.

(2) The IUPAC name of the element with atomic number 107 is Unnilseptium.

(3) The similarity in behaviour of Li with Mg is referred to as the 'diagonal relationship'.

(4) The oxidation state and covalency of Al in $[\mathrm{AlCl}(\mathrm{H_2O})_5]^{2+}$ are 3 and 6, respectively.

60. Identify the incorrect statement related to $\mathrm{PCl_5}$ from the following:

(1) Three equatorial P–Cl bonds make an angle of 120° with each other

(2) Two axial P–Cl bonds make an angle of 180° with each other

(3) Axial P–Cl bonds are longer than equatorial P–Cl bonds

(4) $\mathrm{PCl_5}$ molecule is non-reactive

61. Identify the correct statement about $\mathrm{ClF_3}$ from the following options:

(1) It has T-shaped geometry with two lone pairs on the Cl atom.

(2) It has T-shaped geometry with three lone pairs on the Cl atom.

(3) It has trigonal pyramidal geometry with two lone pairs on the Cl atom.

(4) It has planar trigonal geometry with two lone pairs on the Cl atom.

62. For the ozone ($\mathrm{O_3}$) Lewis structure shown in the figure — a central O atom (1) doubly bonded to one terminal O atom (2) and singly bonded to the other terminal O atom (3) — the correct formal charges on the oxygen atoms numbered 2, 1 and 3 respectively are:

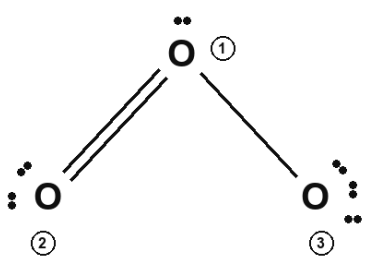

(1) $-1, 0, +1$

(2) $0, +1, -1$

(3) $0, 0, 0$

(4) $+1, 0, -1$

63. The correct formal charges on oxygen atoms numbered 2, 1 and 3 respectively are :

(1) –1, 0, +1

(2) 0, +1, –1

(3) 0, 0, 0

(4) +1, 0, –1

64. Match List I with List II : List I List II A. C2H4 I. 3 □ bonds, 2 □ bonds B. C2H2 II. 3 □ bonds, one lone pair C. CH4 III. 4 □ bonds D. NH3 IV. 5 □ bonds, 1 □ bond Choose the correct answer from the options given below :

(1) A-III, B-IV, C-II, D-I

(2) A-IV, B-I, C-III, D-II

(3) A-I, B-II, C-IV, D-III

(4) A-II, B-III, C-I, D-IV

65. The calculated spin only magnetic moment of Cr^{2+} ion is:

(1) 5.92 BM

(2) 2.84 BM

(3) 3.87 BM

(4) 4.90 BM

---

66. Match List I with List II:

List I (Transition metal/compound/complex)
(a) V_2O_5
(b) Fe
(c) $PdCl_2$
(d) Ni complex

List II (Catalytic Role)
(i) Preparation of ammonia from N_2/H_2 mixture
(ii) Polymerisation of alkynes
(iii) Preparation of H_2SO_4 and SO_2
(iv) Oxidation of ethyne to ethanal

Choose the correct answer from the options given below:

(1) A-III, B-IV, C-I, D-II

(2) A-IV, B-I, C-III, D-II

(3) A-II, B-I, C-IV, D-III

(4) A-III, B-I, C-IV, D-II

---

67. Although the +3 oxidation state is most common in lanthanoids, cerium still shows the +4 oxidation state because:

(1) After losing one more electron, it acquires $4f^{14}$ electronic configuration.

(2) Its nearest inert gas is Radon.

(3) Its atomic number is 61.

(4) After losing one more electron, it acquires $4f^{0}$ electronic configuration.

---

68. The calculated 'spin-only' magnetic moment of Ti^{2+} $(3d^2)$ is:

(1) 5.92 BM

(2) 3.87 BM

(3) 2.84 BM

(4) 4.90 BM

---

69. Match List-I (Complex) with List-II (Type of isomerism):

List-I
(a) $[Pt(NH_3)_2Cl_2]$
(b) $[Co(en)_3]^{3+}$
(c) $[Co(NH_3)_5(NO_2)]Cl_2$
(d) $[Cr(H_2O)_6]Cl_3$

List-II
(i) Optical
(ii) Solvate
(iii) Geometrical
(iv) Linkage

Choose the correct option:

(1) (a)-(iii), (b)-(i), (c)-(ii), (d)-(iv)
(2) (a)-(i), (b)-(iii), (c)-(ii), (d)-(iv)
(3) (a)-(ii), (b)-(iv), (c)-(iii), (d)-(i)
(4) (a)-(iii), (b)-(i), (c)-(iv), (d)-(ii)

---

70. Which one of the following is an ambidentate ligand?

(1) Ethane-1,2-diamine
(2) Ethylenediaminetetraacetate ion
(3) Thiocyanate
(4) Oxalate

---

71. Match List-I (Complex/ion) with List-II (Shape/geometry):

List-I
(a) $[PtCl_2(NH_3)_2]$
(b) $[Co(NH_3)_6]Cl_3$
(c) $[NiCl_4]^{2-}$
(d) $[Fe(CO)_5]$

List-II
(i) Octahedral
(ii) Trigonal bipyramidal
(iii) Square planar
(iv) Tetrahedral

Choose the correct option:

(1) (a)-(iii), (b)-(iv), (c)-(i), (d)-(ii)
(2) (a)-(iii), (b)-(i), (c)-(iv), (d)-(ii)
(3) (a)-(iv), (b)-(i), (c)-(iii), (d)-(ii)
(4) (a)-(i), (b)-(iii), (c)-(iv), (d)-(ii)

---

72. The following two reactions give the same foul-smelling product Z.
Reaction 1: $C_2H_5Cl + X$\ce{-> }Z
Reaction 2: $C_2H_5CONH_2 \xrightarrow{Br_2,\ NaOH} Y \xrightarrow[\Delta]{CHCl3\ /\ ethanolic\ KOH} Z$
X and Z, respectively, are :

(1) X =\ce{AgCN}; $Z = $\ce{C2H5NC}
(2) X =\ce{KCN}; $Z = $\ce{C2H5CN}
(3) X =\ce{AgCN}; $Z = $\ce{C2H5CN}
(4) X =\ce{KCN}; $Z = $\ce{C2H5NC}

73. In the following reaction sequence, X and Z respectively are :

$\mathrm{CH_3CH_2CH_2OH + PCl_3 \longrightarrow CH_3CH_2CH_2Cl + X}$\ce{ + HCl}$\ce{CH3CH2CH2Cl ->[\text{alc. KOH}][\Delta]}YY \ce{->[HBr][\text{peroxide}]}Z$

(1) X =\ce{POCl3}; $Z = $\ce{CH3CHBrCH3}

(2) X =\ce{POCl3}; $Z = $\ce{CH3CH2CH2Br}

(3) X =\ce{H3PO2}; $Z = $\ce{CH3CHBrCH3}

(4) X =\ce{H3PO3}; $Z = $\ce{CH3CH2CH2Br}

---

74. The major product Z formed in the following sequence of reactions is

$$\mathrm{C_2H_6} \xrightarrow[\mathrm{UV}]{\mathrm{Cl_2}} X \xrightarrow{\mathrm{NH_3}} Y \xrightarrow[\text{(ii) H2O}]{\text{(i) NaNO2/HCl}} Z$$

(1) $\mathrm{C_2H_5NO_2}$

(2) $\mathrm{CH_3-N=N-OH}$

(3) $\mathrm{C_2H_5OH}$

(4) $\mathrm{C_2H_5NH_2}$

---

75. The number of chlorine atoms present in the organic products X and Y of the following reactions, respectively, are :

$$\mathrm{C_6H_6 + 6\,Cl_2} \xrightarrow[\text{dark, cold}]{\text{anhyd. AlCl3}} X$$

$$\mathrm{C_6H_6 + 3\,Cl_2} \xrightarrow[\mathrm{500\ K}]{\mathrm{UV}} Y$$

(1) 3 and 3

(2) 6 and 3

(3) 6 and 6

(4) 3 and 6

---

76. Consider the following reaction:

$\mathrm{2\,A\,(g) + B\,(g) \longrightarrow 2\,D\,(g)}$

$\Delta U^\circ = -10\ kJ\,mol^{-1}$ and $\Delta S^\circ = -44\ J\,K^{-1}$ at $298\ \mathrm{K}$.

Identify the correct option with ΔG° for the reaction and the spontaneity of the reaction at $298\ \mathrm{K}$.

(Given: $R = 8.31\ J\,mol^{-1}K^{-1}$)

(1) $-1.635\ kJ\,mol^{-1}$, spontaneous

(2) $-0.63568\ kJ\,mol^{-1}$, spontaneous

(3) $+0.63568\ kJ\,mol^{-1}$, non-spontaneous

(4) $+1.635\ kJ\,mol^{-1}$, non-spontaneous

---

77. At a certain temperature T (K), during a process, $500\ \mathrm{J}$ is absorbed by the system and work of $200\ \mathrm{J}$ is done by the system. Then the change in internal energy of the system is:

(1) $400\ \mathrm{J}$

(2) $300\ \mathrm{J}$

(3) $700\ \mathrm{J}$

(4) $500\ \mathrm{J}$

---

78. • In [Pt(Cl2)(NH3)2]; Pt has dsp2 hybridisation, so shape of complex is square planar. • In [Co(NH3)6]Cl3; Co has d2sp3 hybridisation so shape of complex is octahedral. • In [NiCl4]2–; Ni has sp3 hybridisation so shape of complex ion is tetrahedral. • In [Fe(CO)5]; shape of complex is trigonal bipyramidal. The functional group that can be identified through phthalein dye test is :

(1) Aldehyde

(2) Phenolic

(3) Carboxylic acid

(4) Alcohol

---

79. The pair of molecules that are metamers among the following is:

(1) $\mathrm{CH_3CH_2CH_2OH}$ and $\mathrm{CH_3-CH(OH)-CH_3}$

(2) $\mathrm{CH_3CH_2CH_2CH_2CH_3}$ and $\mathrm{(CH_3)_2CHCH_2CH_3}$

(3) $\mathrm{CH_3CH_2CH_2CH_2OH}$ and $\mathrm{(CH_3)_3C-OH}$

(4) $\mathrm{CH_3OCH_2CH_2CH_3}$ and $\mathrm{CH_3CH_2OCH_2CH_3}$

80. Match List-I (organic transformation) with List-II (reagents) and choose the correct option.

List-I
A. $C_6H_6 \longrightarrow C_6H_5OH$ (benzene to phenol)
B. $CH_3COOH \longrightarrow CH_3CH_2OH$
C. $CH_3CH_2CH_2OH \longrightarrow CH_3CH{=}CH_2$
D. $C_6H_5CH(CH_3)_2 \longrightarrow C_6H_5OH$ (cumene to phenol)

List-II
(I) (i) Oleum; (ii) $NaOH$, heat; (iii) H^+
(II) (i) O_2; (ii) H_2O/H^+
(III) (i) CH_3OH, H^+; (ii) H_2, catalyst
(IV) (i) conc. H_2SO_4, heat; (ii) H^+/H_2O

(1) A-II, B-III, C-I, D-IV
(2) A-II, B-III, C-IV, D-I
(3) A-II, B-IV, C-III, D-I
(4) A-I, B-III, C-IV, D-II

---

81. The functional group that can be identified through the phthalein dye test is:

(1) Aldehyde
(2) Phenolic
(3) Carboxylic acid
(4) Alcohol

---

82. In the following reaction, two products X and Y are formed:
\ce{C6H5OH ->[\text{conc. } HNO3][\text{conc. } H2SO4] X + Y}
where X and Y are o-nitrophenol and p-nitrophenol. The suitable method that can be used for the separation of products X and Y is:

(1) Fractional distillation
(2) Sublimation
(3) Differential extraction
(4) Continuous extraction

---

83. Na Mg Be Si P 0.9 1.2 1.5 1.8 2.1 Match List I with List II: List I A. List II (I) (i) Oleum; (ii) NaOH, □; (iii) H+ B. CH3COOH ⟶ CH3CH2OH (II) (i) O2; (ii) H2O/H+ C. CH3CH2CH2OH ⟶ (III) (i) CH3OH, H+; (ii) H2, catalyst D (IV) (i) conc. H2SO4, □; (ii) H+/H2O - 31 - NEET (UG)-2026 (Code-11) Choose the correct answer from the options given below :

(1) A-II, B-III, C-I, D-IV
(2) A-II, B-III, C-IV, D-I
(3) A-II, B-IV, C-III, D-I
(4) A-I, B-III, C-IV, D-II

---

84. Compound P (C_8H_8O) gives a red-orange precipitate with 2,4-DNP reagent and does not reduce Fehling's reagent. On drastic oxidation with chromic acid, P gives an aromatic product Q that produces effervescence on treatment with aq. $NaHCO_3$. Compounds P and Q respectively are:

(1) $P = C_6H_5COCH_3$; $Q = C_6H_5COCOOH$
(2) $P = p\text{-}CH_3C_6H_4CHO$; $Q = p\text{-}CH_3C_6H_4COOH$
(3) $P = p\text{-}CH_3C_6H_4CHO$; $Q = HOOC{-}C_6H_4{-}COOH$ (terephthalic acid)
(4) $P = C_6H_5COCH_3$ (acetophenone); $Q = C_6H_5COOH$ (benzoic acid)

---

85. Given below are certain reactions. Identify the reaction for which K P □ K C .

(1) H2O(g) + CO(g) □ H2 (g) + CO2 (g)
(2) N2 (g) + 3H2 (g) □ 2NH3 (g)
(3) H2 (g) + I2 (g) □ 2HI(g)
(4) N2 (g) + O2 (g) □ 2NO(g)

86. l Subshell 0 s 1 p 2 d 3 f In a qualitative analysis, Bi3+ is detected by appearance of precipitate of BiO(OH)(s). Calculate pH when the following equilibrium exists at 298 K. BiO(OH)(s) ⇌ BiO+(aq) + OH–(aq), K= 4 × 10–10 (Given : log2 = 0.3010)

(1) 8.714 **(2)** 4.699

(3) 5.286 **(4)** 9.301

87. At 298 K, a certain buffer solution contains equal concentrations of X – and HX, Kb for X– is 10–10. What is the pH of this buffer solution?

(1) 2 **(2)** 4

(3) 6 **(4)** 10

88. Phenolphthalein is used as an indicator for the titration of sodium hydroxide solution against a standard solution of oxalic acid. The colour change that is observed at an alkaline pH close to the equivalence point during this titration is:

(1) pinkish red to yellow **(2)** yellow to pinkish red

(3) pink to colourless **(4)** colourless to pink

89. Select the reagents that reduce nitriles to primary amines.
A. (i) $LiAlH_4$; (ii) H_2O
B. $Sn + HCl$
C. H_2/Ni
D. $Na(Hg)/C_2H_5OH$
E. $Br_2/aq \cdot NaOH$
Choose the correct answer from the options given below.

(1) B, D and E only **(2)** A, C and D only

(3) A, D and E only **(4)** A, B and C only

90. The following two reactions give the same foul-smelling product Z.

$$C_2H_5Cl \xrightarrow{X} Z$$

$$C_2H_5CONH_2 \xrightarrow{Br_2+NaOH} C_2H_5NH_2 \xrightarrow[\Delta]{CHCl_3\ /\ \text{ethanolic KOH}} Z$$

X and Z, respectively, are:

(1) $X = AgCN; Z = C_2H_5NC$ **(2)** $X = KCN; Z = C_2H_5CN$

(3) $X = AgCN; Z = C_2H_5CN$ **(4)** $X = KCN; Z = C_2H_5NC$

Biology · 90 Qs

91. Arrange the following in the correct developmental sequence related to microsporogenesis:

A. Microspore tetrads
B. Sporogenous tissue
C. Pollen grains
D. Pollen mother cells

Choose the correct answer from the options given below:

(1) D, A, C, B **(2)** B, D, A, C

(3) B, D, C, A **(4)** A, D, C, B

92. Which one of the following is a triploid cell?

(1) Synergid
(2) Central cell
(3) Zygote
(4) Primary endosperm cell

93. Which one of the following types of pollination brings genetically different types of pollen grains to the stigma?

(1) Autogamy
(2) Xenogamy
(3) Geitonogamy
(4) Cleistogamy

94. Which one of the following statements is not true about the universal rules of binomial nomenclature?

(1) Biological names are generally in Latin
(2) Both the words in a biological name, when handwritten, are separately underlined or printed in italics
(3) The specific epithet in the biological name starts with a small letter
(4) The first word in the biological name represents the specific epithet, while the second component denotes the genus

95. The main criteria used for Five Kingdom Classification proposed By R.H. Whittaker (1969) included :
A. Cell structure
B. Body organization
C. Presence of flagellum
D. Reproduction
E. Phylogenetic relationships
Choose the correct answer from the options given below :

(1) A, B, C, D and E
(2) B, C and D only
(3) A, B, D and E only
(4) A, B and E only

96. Spermatogonia undergo a series of cell divisions to produce sperms. Select the correct statements from the following:
A. Spermatogonia always undergo meiotic cell division.
B. Primary spermatocytes divide mitotically to produce secondary spermatocytes.
C. Secondary spermatocytes, through their second meiotic division, produce haploid spermatids.
D. Spermatids produce spermatozoa through mitosis.
E. Spermatids transform into spermatozoa by spermiogenesis.
Choose the correct answer from the options given below:

(1) A and E only
(2) C and E only
(3) A, C and E only
(4) B, C and D only

97. Arrange the following cell layers/structures around the female gamete, from outer to inner side:
A. Zona pellucida
B. Perivitelline space
C. Corona radiata
D. Plasma membrane of ovum
Choose the correct answer from the options given below:

(1) D, B, A, C
(2) C, A, D, B
(3) C, A, B, D
(4) A, C, B, D

98. Match List I with List II related to embryonic development at various months of pregnancy:

List-I

A. The foetus movement starts and hair appears on the head

B. The foetus develops limbs and digits

C. The foetus develops external genital organs

D. The foetus body is covered with fine hair; eyelids separate and eyelashes are formed

List-II

(I) 24 weeks of pregnancy

(II) 20 weeks of pregnancy

(III) 8 weeks of pregnancy

(IV) 12 weeks of pregnancy

Choose the correct answer from the options given below:

(1) A-IV, B-II, C-III, D-I

(2) A-II, B-III, C-IV, D-I

(3) A-III, B-II, C-IV, D-I

(4) A-II, B-IV, C-III, D-I

---

99. In which one of the following, the ovules are not enclosed by an ovary wall and remain exposed?

(1) Funaria

(2) Pinus

(3) Selaginella

(4) Wolffia

---

100. Choose the correct statement regarding GIFT to overcome infertility.

(1) Ova collected from a female donor are transferred to the uterus of an infertile female.

(2) Early embryos with up to 8 blastomeres are transferred to the uterus of an infertile female.

(3) Early embryos with up to 8 blastomeres are transferred into the fallopian tube of an infertile female.

(4) It is the transfer of an ovum collected from a donor into the fallopian tube of another female who cannot produce ovum but can provide suitable environment for fertilization and development.

---

101. Match List I and List II:

List-I

(A) Progestasert

(B) Multiload 375

(C) Diaphragm

(D) Saheli

List-II

(i) Barrier made of rubber used by females

(ii) Oral contraceptive

(iii) Hormone releasing IUD

(iv) Copper releasing IUD

Choose the correct answer from the options given below:

(1) A-iii, B-iv, C-i, D-ii

(2) A-iv, B-ii, C-i, D-iii

(3) A-iv, B-iii, C-i, D-ii

(4) A-iii, B-iv, C-ii, D-i

102. Pyramid of number in grassland ecosystem is upright • Pyramid of energy in pond ecosystem is upright • Pyramid of biomass in grassland is upright • Pyramid of biomass in sea is inverted Choose the correct statement regarding GIFT to overcome infertility.

(1) Ova collected from a female donor are transferred to the uterus of an infertile female.

(2) Early embryos with up to 8 blastomeres are transferred to the uterus of an infertile female.

(3) Early embryos with up to 8 blastomeres are transferred into the fallopian tube of an infertile female.

(4) It is the transfer of an ovum collected from a donor into the fallopian tube of another female who cannot produce ovum but can provide suitable envoronment for fertilization and development.

---

103. Select the incorrect statements from the following:

A. Digestive system in Platyhelminthes is incomplete.
B. Bilateral symmetry is a characteristic feature of adult Echinoderms.
C. Pseudocoelom is possessed by Aschelminthes.
D. Notochord is persistent throughout life in the class Chondrichthyes.
E. Members of class Reptilia maintain a constant body temperature.

(1) A and C only

(2) B and E only

(3) C and D only

(4) B and D only

---

104. Select the set of fishes which belong to the class Osteichthyes:

(1) Devil fish, Cuttlefish and Hagfish

(2) Saw fish, Fighting fish and Dog fish

(3) Starfish, Hagfish and Cuttlefish

(4) Flying fish, Angel fish and Fighting fish

---

105. A group of researchers procured some fish like animals and upon investigation the following characters were observed:

A. Endoskeleton was made of cartilage.
B. Ectoparasitic; as they were found attached on fish skin with their circular sucking mouth.
C. Paired fins and scales were absent, but 7 pairs of gill slits were present.

Which of the following species of animals did they consider to fit best with these characters?

(1) Scoliodon sp.

(2) Petromyzon sp.

(3) Exocoetus sp.

(4) Branchiostoma sp.

---

106. The flightless bird with forelimbs modified as paddle-like structures suited for swimming is known as:

(1) Struthio

(2) Neophron

(3) Aptenodytes

(4) Psittacula

---

107. What is the probability of having children with 'O' blood group, where both mother and father are heterozygous for 'A' and 'B' blood group, respectively?

(1) 25%

(2) 0%

(3) 75%

(4) 50%

108. Which one of the following disorders is caused by the substitution of Glutamic acid (Glu) by Valine (Val) at the sixth position of the beta globin chain of the haemoglobin molecule?

(1) Thalassemia
(2) Sickle-cell anaemia
(3) Phenylketonuria
(4) Haemophilia

---

109. Which of the following statements are true with reference to the sex-determination in honeybees?
A. An offspring formed from the union of a sperm and an egg, develops as a female (queen or worker).
B. An unfertilized egg develops as a male by parthenogenesis.
C. A male has half the number of chromosomes than that of a female.
D. Males produce sperms by meiosis.
E. Honeybees have a haplodiploid sex-determination system.
Choose the correct answer from the options given below :

(1) A, B, C and E only
(2) B, C, D and E only
(3) A, B, C and D only
(4) A, B, D and E only

---

110. Match List I with List II :
List-I
A. Incomplete dominance
B. Co-dominance
C. Pleiotropy
D. Polygenic inheritance
List-II
I. Human skin colour
II. Inheritance of flower colour in Antirrhinum sp.
III. Phenylketonuria disease in humans
IV. ABO blood groups
Choose the correct answer from the options given below :

(1) A-II, B-IV, C-III, D-I
(2) A-I, B-III, C-II, D-IV
(3) A-I, B-IV, C-III, D-II
(4) A-II, B-I, C-III, D-IV

---

111. In a population of a grasshopper species, the chromosome number of some members is 23 and some other members possess 24 chromosomes. The 23 and 24 chromosome-bearing members in this species are _____.

(1) females and males, respectively
(2) all males
(3) males and females, respectively
(4) all females

---

112. The sixth mutant codon of beta globin gene causing polymerization of Haemoglobin and change in RBC shape is _____.

(1) GUG
(2) AUG
(3) GAG
(4) CAG

---

113. Which of the following statements are correct with reference to packaging of DNA helix ?
A. Histones are organized to form a unit of eight molecules called histone octamer.
B. Histones are negatively charged basic proteins.
C. Histones are rich in the basic amino acid residues - lysine and arginine.
D. The positively charged DNA is wrapped around the histone octamer to form nucleosome.
E. The packaging of chromatin at higher levels requires an additional set of proteins called non-histone chromosomal proteins.
Choose the correct answer from the options given below :

(1) A, C and E only
(2) B, D and E only
(3) C, D and E only
(4) A, B and D only

114. Arrange the following steps of DNA fingerprinting in a correct sequence.
A. Isolation of DNA and its digestion by restriction endonucleases.
B. Hybridisation using a labelled VNTR probe.
C. Transferring of separated DNA fragments to synthetic membranes.
D. Detection of hybridised DNA fragments by autoradiography.
E. Separation of DNA fragments by electrophoresis.
Choose the correct answer from the options given below :

(1) A, B, D, C, E
(2) A, D, B, E, C
(3) A, E, C, B, D
(4) A, E, B, C, D

115. In the lac operon, the z gene codes for

(1) permease
(2) transacetylase
(3) beta-galactosidase
(4) the repressor of lac operon

116. Which of the following statements are correct with reference to a transcription unit?
A. A transcription unit in DNA is defined primarily by three regions : promoter, structural gene and terminator.
B. The promoter is said to be located towards the 5-end of the structural gene.
C. The promoter is a DNA sequence that provides binding site for RNA polymerase.
D. The promoter defines the template and coding strands.
E. The terminator is located towards the 3-end of the coding strand and it defines the end of the process of transcription.
Choose the correct answer from the options given below:

(1) A, B, C and D only
(2) A, C, D and E only
(3) B, C, D and E only
(4) A, B, C , D and E

117. Which of the following floral formula is the correct floral formula of Solanaceae family?

(1) [See figure/structure in question paper]
(2) [See figure/structure in question paper]
(3) [See figure/structure in question paper]
(4) [See figure/structure in question paper]

118. Match List I (Placentation) with List II (Example):
List I (Placentation): A. Marginal; B. Axile; C. Parietal; D. Basal
List II (Example): I. Mustard; II. Pea; III. Marigold; IV. Lemon
Choose the correct answer from the options given below:

(1) A-II, B-IV, C-I, D-III
(2) A-I, B-III, C-II, D-IV
(3) A-III, B-I, C-IV, D-II
(4) A-IV, B-II, C-I, D-III

119. Identify the correct floral formula of family Solanaceae.

(a) ⊕ ⚥ K5 C5 A5 G(2) (sepals & petals free)

(b) ⊕ ⚥ K(5) C(5) A5 G(2) (gamosepalous, gamopetalous, epipetalous, ovary superior bicarpellary)

(c) % ⚥ K(5) C1+2+(2) A(9)+1 G1

(d) ⊕ ⚥ P(3+3) A(3+3) G(3)

(1) ⊕ ⚥ K5 C5 A5 G(2)

(2) ⊕ ⚥ K(5) C(5) A5 G(2)

(3) % ⚥ K(5) C1+2+(2) A(9)+1 G1

(4) ⊕ ⚥ P(3+3) A(3+3) G(3)

---

120. In racemose inflorescence, _____.

(1) The main axis terminates in a flower

(2) Flowers are solitary

(3) The growth is limited

(4) Flowers are borne in an acropetal succession

---

121. In angiosperms, root hairs arise from which one of the following regions of the root?

(1) The root cap zone

(2) The region of meristematic activity

(3) The region of elongation

(4) The region of maturation

---

122. The main function of bulliform cells in grasses is :

(1) to make the leaf impermeable to fungal spores.

(2) to transport water.

(3) to perform photosynthesis.

(4) to minimize water loss during water stress.

---

123. Match List-I with List-II :

List-I
A. Conjunctive tissue
B. Casparian strips
C. Subsidiary cells
D. Starch sheath

List-II
I. Specialised cells in the vicinity of guard cells
II. Endodermal cells rich in starch
III. Tissue between xylem and phloem
IV. Endodermal cells with suberin deposition

Choose the correct answer from the options given below :

(1) A-IV, B-III, C-I, D-II

(2) A-III, B-IV, C-II, D-I

(3) A-III, B-IV, C-I, D-II

(4) A-IV, B-III, C-II, D-I

---

124. Evolution of human appears parallel to the progressive development of brain and language skills. As such, the evolution of individual species in the sequence of their appearance is:

(1) Ramapithecus → Homo habilis → Homo erectus → Neanderthal → Homo sapiens

(2) Homo sapiens → Ramapithecus → Homo habilis → Neanderthal → Homo erectus

(3) Homo habilis → Homo erectus → Ramapithecus → Neanderthal → Homo sapiens

(4) Neanderthal → Ramapithecus → Homo habilis → Homo erectus → Homo sapiens

125. Match List I with List II with respect to chronology of evolution of life forms

List-I

A. About 65 mya

B. About 500 mya

C. About 350 mya

D. About 320 mya

List-II

(I) Jawless fish probably evolved

(II) The dinosaurs suddenly disappeared from the earth

(III) Seaweeds and few plants probably existed

(IV) Invertebrates were formed and became active

Choose the correct answer from the options given below:

(1) A(III), B(IV), C(I), D(II)

(2) A(I), B(II), C(III), D(IV)

(3) A(II), B(IV), C(III), D(I)

(4) A(II), B(IV), C(I), D(III)

---

126. Which of the following is not an example of convergent evolution?

(1) Flippers of penguins and dolphins

(2) Eyes of octopuses and mammals

(3) Fore limbs of whales and bats

(4) Wings of butterflies and birds

---

127. The following are the stages of life cycle of Plasmodium. Arrange the stages in the proper order.

A. The parasites reproduce asexually in RBCs, bursting the cells.

B. The parasites reproduce asexually in liver cells, bursting the cells and releasing into blood.

C. Gametocytes develop in RBCs.

D. Sporozoites reach the liver through the blood.

E. Female mosquito injects sporozoites into humans during bite.

Choose the correct answer from the options given below:

(1) E, D, B, A, C

(2) A, B, C, D, E

(3) C, A, B, D, E

(4) E, C, D, B, A

---

128. Match List I with List II:

List I (Drug)

A. Nicotine

B. Morphine

C. Heroin

D. Cocaine

List II (Effect)

I. Causes sense of euphoria and increased energy

II. Stimulates adrenal gland to release catecholamines into blood circulation

III. Effective sedative and painkiller

IV. A depressant; slows down body function

Choose the correct answer from the options given below:

(1) A–III, B–II, C–IV, D–I

(2) A–II, B–III, C–I, D–IV

(3) A–II, B–III, C–IV, D–I

(4) A–III, B–II, C–I, D–IV

129. Choose the correct statements regarding frog's anatomy:

A. Hepatic portal system is the special venous connection between liver and intestine.

B. There are twelve pairs of cranial nerves arising from the brain.

C. The ureters and oviducts open separately into the cloaca in female frogs.

D. Hind-brain consists of cerebellum, medulla oblongata and optic lobes.

E. Sinus venosus joins the right atrium of heart.

Choose the correct answer from the options given below:

(1) A, B and C only
(2) B and D only
(3) B and C only
(4) A, C and E only

---

130. Male frogs can be distinguished from female frogs due to the presence of

A. Bulging eyes

B. Vocal sacs

C. Webbed digits in feet

D. Copulatory pad on first digit of fore limbs

E. Olive green-coloured skin with dark irregular spots

Choose the correct answer from the options given below

(1) B and C only
(2) C and E only
(3) A and B only
(4) B and D only

---

131. Select the correct statements regarding cell membrane in eukaryotic cell.
A. Membrane of human RBCs has approximately 52% protein.
B. Major phospholipids are arranged in a bilayer.
C. Extensions of the plasma membrane into the cell form mesosomes.
D. Tails towards the inner part of lipids are hydrophobic and thus protected from aqueous medium.
E. Glycocalyx is present on the outer surface of the plasma membrane.
Choose the correct answer from the options given below:

(1) C, D and E only
(2) B, C and E only
(3) A, B and D only
(4) A, C and E only

---

132. Which one of the following is the site for active ribosomal RNA synthesis?

(1) Centrosome
(2) Chromatin
(3) Nucleolus
(4) Kinetochore

133. Choose the correct statements regarding cell organelles and their inclusions.

A. The endomembrane system includes Golgi complex, endoplasmic reticulum and mitochondria.
B. Rough endoplasmic reticulum bears ribosomes on its surface.
C. Both mitochondria and plastids have circular DNA.
D. A network of microtubules, microfilaments and intermediate filaments present in the cytoplasm is called cytoskeleton.
E. Mitochondrion is a single membrane-bound structure.
Choose the correct answer from the options given below :

(1) A and B only
(2) A, B and C only
(3) C, D and E only
(4) B, C and D only

134. Non-membrane bound cell organelles found in both prokaryotic and eukaryotic cells are _____.

(1) Ribosomes
(2) Lysosomes
(3) Centrosomes
(4) Mitochondria

135. What is the reason behind production of large holes in 'Swiss Cheese'?

(1) The production of large amount of CO_2 by Propionibacterium sharmanii
(2) The production of large amount of CO_2 by Clostridium butylicum
(3) The production of large amount of CO_2 and H_2 by lactic acid bacteria called Lactobacillus
(4) The production of large amount of CO_2 and H_2 by Trichoderma polysporum

136. A biocontrol agent to be a part of an integrated pest management should be

(1) Species-specific and symbiotic
(2) Free living and broad spectrum
(3) Narrow spectrum and symbiotic
(4) Species-specific and inactive on non-target organisms

137. Match List I with List II:

List I (Bioactive molecules)
A. Streptokinase
B. Statins
C. Lipases
D. Cyclosporin A

List II (Importance)
I. Immunosuppressive agent
II. Removal of clots from the blood vessels
III. Blood cholesterol-lowering agent
IV. Detergent formulations

Choose the correct answer from the options given below:

(1) A–II, B–III, C–I, D–IV
(2) A–IV, B–III, C–II, D–I
(3) A–III, B–II, C–IV, D–I
(4) A–II, B–III, C–IV, D–I

138. Among the following pairs of microbes, which pair has both the microbes that can be used as biofertilizers?

(1) Aspergillus and Rhizopus
(2) Rhizobium and Rhizopus
(3) Cyanobacteria and Rhizobium
(4) Aspergillus and Cyanobacteria

139. Identify the correct statements about biomolecules.

A. Lipids are generally water soluble.
B. Proteins are polypeptides.
C. Polysaccharides are long chains of sugars.
D. Adenine and guanine are substituted pyrimidines.
E. Almost all enzymes are proteins.

Choose the correct answer from the options given below:

(1) B, D and E only
(2) B, C and E only
(3) A, B and C only
(4) C, D and E only

140. Which of the following statements are correct regarding amino acids?

A. They are substituted methanes.
B. Serine is an aromatic amino acid.
C. Valine is a neutral amino acid.
D. Lysine is an acidic amino acid.

Choose the correct answer from the options given below:

(1) C and D only
(2) B and C only
(3) A and C only
(4) A and B only

141. Match List I with List II :

List I
A. Trypsin
B. Morphine
C. Concanavalin A
D. Collagen

List II
I. Intercellular ground substance
II. Lectin
III. Enzyme
IV. Alkaloid

Choose the correct answer from the options given below :

(1) A-III, B-IV, C-II, D-I
(2) A-I, B-II, C-III, D-IV
(3) A-IV, B-III, C-II, D-I
(4) A-III, B-II, C-IV, D-I

142. Alpha-helix is found in which level of protein structure?

(1) Secondary structure
(2) Tertiary structure
(3) Primary structure
(4) Quaternary structure

143. The following reaction depicts the activity of a particular class of enzymes : [Figure: X and Y are substituents on a C-C bond. Substrate (X-C-C-Y) is converted by enzyme E to products X-Y and C=C]. Identify the enzymes class 'E' from the following options :

(1) Transferases
(2) Isomerases
(3) Lyases
(4) Ligases

144. Arrange the following steps of somatic hybridisation in a correct sequence. A. Digestion of cell walls. B. Isolation of naked protoplasts. C. Fusion of protoplasts to get hybrid protoplast. D. Isolation of single cells from two different varieites of plants. E. Growing of hybrid protoplast to form a new plant. Choose the correct answer from the options given below:

(1) D, A, B, C, E
(2) E, B, A, D, C
(3) D, B, A, E, C
(4) E, A, B, C, D

145. Which of the following statements are correct with respect to DNA separation, isolation and visualization?
A. The cutting of DNA is done by molecular scissors.
B. The DNA fragments separate according to their size in an agarose gel, upon electrophoresis.
C. The separated DNA fragments can be seen without staining when exposed to UV light.
D. The separated DNA fragments, when stained with ethidium bromide, can be seen in visible light.
Choose the correct answer from the options given below:

(1) B and D only
(2) A and B only
(3) B and C only
(4) A and D only

146. Which of the following statements are not true regarding restriction endonucleases?
A. They are called molecular scissors.
B. These are the enzymes responsible for restricting the growth of bacteriophages in E. coli.
C. They cut the DNA only at the centre of the palindromic sites.
D. They remove nucleotides only from the ends of DNA fragments.
E. They recognise specific palindromic base-pair sequences.
Choose the answer from the options given below:

(1) A and B only
(2) A and E only
(3) D and E only
(4) C and D only

147. Insertion of a foreign DNA at BamHI site in an E.coli cloning vector pBR322 results in the loss of antibiotic resistance towards:

(1) Ampicillin and tetracycline
(2) Ampicillin
(3) Tetracycline
(4) Gentamycin

148. Match List I with List II:

List-I

A. Genetically modified organism

B. Thermostable DNA polymerase

C. Ti plasmid

D. pBR322

List-II

(I) Agrobacterium tumefaciens

(II) Bt cotton

(III) Thermus aquaticus

(IV) Escherichia coli

Choose the correct answer from the options given below:

(1) A-II, B-III, C-I, D-IV

(2) A-II, B-I, C-IV, D-III

(3) A-I, B-IV, C-III, D-II

(4) A-I, B-II, C-IV, D-III

---

149. The human protein named α-1-antitrypsin, obtained from transgenic animals, is used for the treatment of _____.

(1) Emphysema

(2) Alzheimer's disease

(3) Rheumatoid arthritis

(4) Cystic fibrosis

---

150. The toxin proteins isolated from Bacillus thuringiensis, coded by which of the following genes would control cotton bollworms and corn borer, respectively?

(1) cryIAc and cryIAb

(2) cryIAc and cryIIAb

(3) cryIIAb and cryIAc

(4) cryIAc and cryIIIAb

---

151. In which animal do haploid cells divide mitotically to produce gametes?

(1) Male honeybees

(2) Male earthworms

(3) Male frogs

(4) Male grasshoppers

---

152. Match List I with List II :

List-I (Phase of cell cycle)

A. G1 phase

B. S phase

C. G2 Phase

D. M phase

List-II (Activity)

I. Actual cell division occurs

II. Cell is metabolically active and continuously grows but does not replicate its DNA

III. Synthesis of DNA occurs and the amount of DNA per cell doubles

IV. Proteins are synthesized while cell growth continues

Choose the correct answer from the options given below :

(1) A-IV, B-I, C-II, D-III

(2) A-I, B-II, C-III, D-IV

(3) A-III, B-IV, C-I, D-II

(4) A-II, B-III, C-IV, D-I

---

153. Which of the following equations depicts Verhulst-Pearl logistic population growth?

(1) $dN/dt = rN [(K + N) / K]$

(2) $dN/dt = rN [(K – N) / K]$

(3) $dN/dt = rN [(K – N) / N]$

(4) $dN/dt = rN [K / (K – N)]$

154. Which one of the following is an appropriate example of sexual deceit?

(1) Female wasp and fig
(2) Ophrys and bumblebee
(3) Sea anemone and clown fish
(4) Cuckoo and crow

---

155. Choose the correct statements regarding population interactions between two species.

A. In both parasitism and commensalism, only one species benefits and the other species is harmed.
B. Both species benefit in mutualism.
C. Both species benefit in commensalism.
D. In parasitism, only one species benefits and the other species is harmed.
E. In amensalism, one species is harmed and the other is unaffected.

Choose the correct answer from the options given below:

(1) B and E only
(2) A and B only
(3) B, D and E only
(4) A and D only

---

156. List-I List-II (Growth Regulator) (Function/Effect) A. 2,4-D (Auxin) III. Herbicide B. GA3 (Gibberellic Acid) I. Brewing industry C. Kinetin (Cytokinin) IV. Nutrient mobilisation D. ABA (Abscisic Acid) II. Stimulation of stomatal closure The enzyme required for carboxylation in the Calvin cycle is

(1) Hexokinase
(2) PEP carboxylase
(3) RuBP carboxylase - oxygenase
(4) Carboxypeptidase

---

157. Find the incorrect statement(s) about photosynthesis from the following:
A. The water splitting complex is associated with PS I.
B. C4 plants use the C3 pathway of CO2 fixation as the main biosynthetic pathway.
C. In C4 plants, photorespiration does not occur.
D. C3 plants exhibit 'Kranz' anatomy.
E. ATP synthesis in chloroplast occurs through chemiosmosis.
Choose the answer from the options given below:

(1) B and C only
(2) B only
(3) B and E only
(4) A and D only

---

158. The enzyme required for carboxylation in the Calvin cycle is

(1) Hexokinase
(2) PEP carboxylase
(3) RuBP carboxylase - oxygenase
(4) Carboxypeptidase

---

159. How many ATP and NADPH molecules are required to make one molecule of glucose through the Calvin pathway?

(1) 18 ATP and 12 NADPH
(2) 12 ATP and 18 NADPH
(3) 24 ATP and 18 NADPH
(4) 6 ATP and 12 NADPH

---

160. Match List I with List II:

List-I

A. Decomposition

B. Detritus

C. Mineralisation

D. Humification

List-II

I. Accumulation of dark coloured amorphous colloidal substance

II. Release of inorganic nutrients by the activity of microbes in soil

III. Breaking down of complex organic matter into inorganic substances.

IV. Dead remains of plants and animals including fecal matter

Choose the correct answer from the options given below:

(1) A-IV, B-III, C-I, D-II

(2) A-III, B-IV, C-II, D-I

(3) A-I, B-II, C-III, D-IV

(4) A-III, B-II, C-I, D-IV

---

161. Ecological pyramids represent the relationship between the organisms at different trophic levels and they are generally inverted for:

(1) Pyramid of number in grassland

(2) Pyramid of energy in pond ecosystem

(3) Pyramid of biomass in grassland

(4) Pyramid of biomass in sea

---

162. Match List I with List II :

List I

A. Productivity

B. Net primary productivity

C. Gross primary productivity

D. Secondary productivity

List II

I. Gross primary productivity minus respiration losses

II. Rate of formation of new organic matter by consumers

III. Rate of biomass production

IV. Rate of production of organic matter during photosynthesis

Choose the correct answer from the options given below :

(1) A-III, B-I, C-IV, D-II

(2) A-I, B-II, C-III, D-IV

(3) A-I, B-III, C-IV, D-II

(4) A-III, B-I, C-II, D-IV

---

163. $2(C_{51}H_{98}O_6) + 145\ O_2 \rightarrow 102\ CO_2 + 98\ H_2O$ + energy

The Respiratory Quotient (RQ) of a biomolecule used for respiration, as per the above equation would be :

(1) Between 0.5 and 0.95

(2) Less than 0.5

(3) 1.0

(4) Between 1.25 and 2

---

164. Match List I (Process) with List II (Location):

List I
A. Glycolysis
B. ETS
C. Accumulation of protons
D. Krebs' cycle

List II
I. Inner mitochondrial membrane
II. Mitochondrial matrix
III. Cytoplasm
IV. Intermembrane space

Choose the correct answer from the options given below:

(1) A-IV, B-II, C-I, D-III
(2) A-II, B-III, C-IV, D-I
(3) A-III, B-I, C-IV, D-II
(4) A-I, B-IV, C-III, D-II

---

165. Exploration of molecular, genetic and species level diversity for novel products of economic importance is known as:

(1) Biopiracy
(2) Bioenergetics
(3) Bioremediation
(4) Bioprospecting

---

166. Since the origin and diversification of life on Earth, there have been five episodes of mass extinction of species. How is the sixth extinction, which is in progress, different from the previous episodes?

(1) The present net species extinction rate is zero.
(2) The current species extinction rate is nearly 10 times faster than in previous episodes.
(3) The present species extinction rates are 100 to 1000 times faster than in the pre-human times.
(4) The current species extinction rates are far lower than those in previous episodes.

---

167. Which of the following statements are correct?
A. The Amazon rainforest being cut and cleared for cultivation of soyabeans is an example of habitat loss.
B. Steller's sea cow and passenger pigeon became extinct due to over-exploitation by humans.
C. The Nile perch introduced into Lake Victoria in East Africa helped in population growth of cichlid fish in the lake.
D. Water hyacinth is an invasive species.
E. When a species becomes extinct, the plant and animal species associated with it are not affected.
Choose the correct answer from the options given below:

(1) A, B and E only
(2) A, B and D only
(3) C, D and E only
(4) B, C and D only

---

168. Western Ghats have a large number of plant and animal species that are not found anywhere else. Which of the following terms will you use to notify such species?

(1) Endemic
(2) Vulnerable
(3) Threatened
(4) Keystone

169. "The Evil Quartet" of biodiversity loss includes which of the following?

(1) Over-exploitation; Alien species invasions; Air pollution; Co-extinctions

(2) Habitat loss and fragmentation; Air pollution; Water pollution; Co-extinctions

(3) Habitat loss and fragmentation; over-exploitation; Alien species invasions; Co-extinctions

(4) Over-exploitation; Alien species invasions; Soil pollution; Co-extinctions

---

170. Which of the following is an in situ conservation method?

(1) Sacred Groves

(2) Wildlife Safari Parks

(3) Botanical Gardens

(4) Seed Banks

---

171. Which one of the following is not a characteristic of plant cells in the phase of elongation?

(1) New cell wall deposition

(2) Cell enlargement

(3) Increased vacuolation

(4) Large conspicuous nuclei

---

172. Match List-I (Growth Regulator) with List-II (Function/Effect):

List-I
A. 2,4-D
B. GA3
C. Kinetin
D. ABA

List-II
I. Brewing industry
II. Stimulation of stomatal closure
III. Herbicide
IV. Nutrient mobilisation

Choose the correct answer from the options given below:

(1) A-III, B-I, C-IV, D-II

(2) A-IV, B-III, C-II, D-I

(3) A-I, B-IV, C-III, D-II

(4) A-I, B-II, C-IV, D-III

---

173. Heterophyllous development in response to environment is an example of which of the following phenomena?

(1) Redifferentiation

(2) Elasticity

(3) Dedifferentiation

(4) Plasticity

---

174. In humans, respiration occurs in the following steps. Arrange these steps in the correct order.

A. Diffusion of O_2 and CO_2 between blood and tissues
B. Diffusion of O_2 and CO_2 across alveolar membrane
C. Pulmonary ventilation by which atmospheric air is drawn in and CO_2 rich alveolar air is released out
D. Cellular respiration
E. Transport of gases by the blood

Choose the correct answer from the options given below:

(1) A, B, C, D, E

(2) E, A, C, D, B

(3) C, B, E, A, D

(4) C, A, B, E, D

175. Match List I with List II: List I List II A. Molluscs I. Pulmonary respiration only B. Reptiles II. Branchial respiration C. Adult amphibians III. Cellular respiration D Amoeba IV Pulmonary respiration and cutaneous Choose the correct answer from the options given below:

(1) A–II, B–I, C–IV, D–III
(2) A–I, B–II, C–IV, D–III
(3) A–II, B–I, C–III, D–IV
(4) A–III, B–II, C–I, D–IV

176. Match List-I with List-II.

List-I (Respiratory Volume)
A. ERV (Expiratory Reserve Volume)
B. RV (Residual Volume)
C. IRV (Inspiratory Reserve Volume)
D. TV (Tidal Volume)

List-II (Capacity in mL)
I. 2500 - 3000 mL
II. 500 mL
III. 1000 - 1100 mL
IV. 1100 - 1200 mL

Choose the correct answer from the options given below:

(1) A-III, B-IV, C-I, D-II
(2) A-III, B-I, C-IV, D-II
(3) A-I, B-III, C-II, D-IV
(4) A-I, B-II, C-III, D-IV

177. The WBC count of a person's blood sample is 8000/cu mm. How many eosinophils and lymphocytes would be in the same blood sample approximately?

(1) 300 – 500/cu mm and 1200 – 1500/cu mm respectively
(2) 160 – 240/cu mm and 1600 – 2000/cu mm respectively
(3) 300 – 500/cu mm and 500 – 700/cu mm respectively
(4) 100 – 120/cu mm and 160 – 200/cu mm respectively

178. Select the incorrect statement with reference to Rh grouping.
A. Erythroblastosis foetalis is a condition observed having foetus with Rh–ve blood and mother with Rh+ve blood.
B. Rh antigen is observed on RBCs in the majority of human beings.
C. Before blood transfusion, Rh group should also be matched.
D. Rh incompatibility is observed when a pregnant mother is Rh–ve and the foetus is Rh+ve.
E. Erythroblastosis foetalis can be avoided by administering anti-Rh antibodies to the mother immediately after the delivery of the second child.

(1) C and D only
(2) A and B only
(3) A and E only
(4) B and C only

179. The JGA (Juxta Glomerular Apparatus) is a special sensitive region formed by cellular modifications in _____ related to the same nephron.

(1) Distal convoluted tubule and efferent renal arteriole
(2) Proximal convoluted tubule and efferent renal arteriole
(3) Proximal convoluted tubule and afferent renal arteriole
(4) Distal convoluted tubule and afferent renal arteriole

180. Arrange the following events occuring in Renin-Angiotensin mechanism in the correct order:

A. Increase in blood pressure and Glomerular filtration rate
B. Reabsorption of Na+ and water from distal parts of tubule due to Aldosterone
C. Fall in Glomerular filtration rate
D. Vasoconstriction by Angiotensin II and release of Aldosterone.
E. Renin converts Angiotensinogen into Angiotensin I, followed by Angiotensin II.

Choose the correct answer from the options given below:

(1) A, C, E, B, D
(2) C, A, B, D, E
(3) A, D, B, E, C
(4) C, E, D, B, A

Answer Key

1.C	**2**.C	**3**.D	**4**.D	**5**.B	**6**.A	**7**.A	**8**.C	**9**.C	**10**.C	**11**.D
12.D	**13**.D	**14**.A	**15**.A	**16**.B	**17**.C	**18**.D	**19**.C	**20**.B	**21**.D	**22**.D
23.C	**24**.D	**25**.C	**26**.C	**27**.D	**28**.D	**29**.D	**30**.C	**31**.A	**32**.A	**33**.C
34.B	**35**.C	**36**.A	**37**.C	**38**.D	**39**.D	**40**.B	**41**.C	**42**.A	**43**.A	**44**.D
45.D	**46**.A	**47**.B	**48**.D	**49**.B	**50**.B	**51**.D	**52**.C	**53**.A	**54**.C	**55**.B
56.A	**57**.A	**58**.A	**59**.A	**60**.D	**61**.A	**62**.B	**63**.B	**64**.B	**65**.D	**66**.D
67.D	**68**.C	**69**.D	**70**.C	**71**.B	**72**.A	**73**.B	**74**.C	**75**.C	**76**.C	**77**.B
78.B	**79**.D	**80**.B	**81**.B	**82**.A	**83**.B	**84**.D	**85**.B	**86**.D	**87**.B	**88**.D
89.B	**90**.A	**91**.B	**92**.D	**93**.B	**94**.D	**95**.C	**96**.B	**97**.C	**98**.B	**99**.B
100.D	**101**.A	**102**.D	**103**.B	**104**.D	**105**.B	**106**.C	**107**.A	**108**.B	**109**.A	**110**.A
111.C	**112**.A	**113**.A	**114**.C	**115**.C	**116**.D	**117**.B	**118**.A	**119**.B	**120**.D	**121**.D
122.D	**123**.C	**124**.A	**125**.D	**126**.C	**127**.A	**128**.C	**129**.D	**130**.D	**131**.C	**132**.C
133.D	**134**.A	**135**.A	**136**.D	**137**.D	**138**.C	**139**.B	**140**.C	**141**.A	**142**.A	**143**.C
144.A	**145**.A	**146**.D	**147**.C	**148**.A	**149**.A	**150**.A	**151**.A	**152**.D	**153**.B	**154**.B
155.C	**156**.C	**157**.D	**158**.C	**159**.A	**160**.B	**161**.D	**162**.A	**163**.A	**164**.C	**165**.D
166.C	**167**.B	**168**.A	**169**.C	**170**.A	**171**.D	**172**.A	**173**.D	**174**.C	**175**.A	**176**.A
177.B	**178**.C	**179**.D	**180**.D							

© MedicNEET · medicneet.com · Reproduced for practice. Not for redistribution. Solve interactively: https://www.medicneet.com/open?paper=neet-2026-may&src=pyq_pdf